2005 HVAC

Heating, Ventilation and Air Conditioning - XLR

SPECIFICATIONS

FASTENER TIGHTENING SPECIFICATIONS

Fastener Tightening Specifications

Application	Specification	
	Metric	English
Actuator Retaining Screws - All	1.6 N.m	14 lb in
Actuator Support Bracket Retaining Screws	1.6 N.m	14 lb in
Air Distribution Duct Retaining Screws	1.6 N.m	14 lb in
Air Inlet Housing Retaining Screws	1.6 N.m	14 lb in
Blower Motor Retaining Screws	1.6 N.m	14 lb in
Compressor Clutch Assembly Bolt	10 N.m	89 lb in
Compressor Drain Plug	15 N.m	11 lb ft
Compressor High Pressure Relief Valve	8 N.m	70 lb in
Compressor Hose Assembly to Compressor Retaining Nut	20 N.m	15 lb ft
Compressor Hose to Condenser Fitting Bolt	16 N.m	12 lb ft
Compressor Manifold Stud	10 N.m	89 lb in
Compressor Mounting Bolts	50 N.m	37 lb ft
Compressor Mounting Bracket Bolts	50 N.m	37 lb ft
Crossmember Mounting Nuts	110 N.m	81 lb ft
Defroster Duct Retaining Screws	10 N.m	89 lb in
ECS Position Sensor Mounting Bolt	3 N.m	26 lb in
Engine Wire Harness Bracket Bolt	10 N.m	89 lb in
Evaporator Inlet Line to A/C Condenser Bolt	16 N.m	12 lb ft
Floor Air Outlet Duct Retaining Screws - All	1.6 N.m	14 lb in
Heater Core Cover Retaining Screws	1.6 N.m	14 lb in
Heater Pipe Assembly Retaining Bolt	14 N.m	10 lb ft
Heater Pipe Bracket Retaining Nut	10 N.m	7 lb ft
HVAC Module Case Half Screws	1.6 N.m	14 lb in
HVAC Module Case Screws	4 N.m	35 lb in
HVAC Module to Dash Retaining Nuts	10 N.m	89 lb in

HVAC Module to Upper I/P Beam Retaining Bolts	5 N.m	44 lb in
Mode Valve Assembly Retaining Screws	1.6 N.m	14 lb in
Refrigerant Pressure Sensor	5 N.m	44 lb in
Speaker to Air Distribution Duct Screws	2.5 N.m	22 lb in
TXV to Evaporator Core Mounting Bolts	7 N.m	62 lb in
TXV Block Fitting Nut	20 N.m	15 lb ft
Valve Core	11 N.m	97 lb in

REFRIGERANT SYSTEM CAPACITIES

Refrigerant System Capacities

Application	Specification	
	Metric	**English**
PAG Oil GM P/N 12378526 for United States PAG Oil GM P/N 88900060 for Canada		
Compressor Replacement		
• The Delphi CVC service compressor is precharged with the specified amount of PAG oil.	150 ml[1]	5.0 oz[1]
Condenser / Receiver Dehydrator Replacement	60 ml[1]	2.0 oz[1]
Evaporator Core Replacement	45 ml[1]	1.5 oz[1]
Evaporator Rear Line assembly	15 ml[1]	0.5 oz[1]
• Total System PAG Oil Capacity	150 ml	5.0 oz
R-134a		
• Refrigerant Charge	0.64 kg	1.4 lb
[1] If more than the specified amount of PAG oil was drained from a component, add the equal amount drained.		

DIAGNOSTIC INFORMATION AND PROCEDURES

DIAGNOSTIC STARTING POINT - HEATING, VENTILATION AND AIR CONDITIONING

Begin the system diagnosis with **Diagnostic System Check - Vehicle** in Vehicle DTC Information. The Diagnostic System Check - Vehicle will provide the following information:

- The identification of the control modules which are not communicating.

- The identification of any stored diagnostic trouble codes (DTCs) and their status.

The use of the Diagnostic System Check - Vehicle will identify the correct procedures to begin vehicle diagnosis. These must be performed before system DTC or symptom diagnosis.

LEAK TESTING

Tools Required

- **J 39400-A** Halogen Leak Detector
- **J 41447** Leak Detection Dye. See **Special Tools**.
- **J 42220** Leak Detection Lamp. See **Special Tools**.
- **J 43872** Fluorescent Dye Cleaner. See **Special Tools**.
- **J 46297** A/C Dye Injector Kit. See **Special Tools**.
- **J 46297-12** Replacement Dye Cartridges. See **Special Tools**.

Refrigerant Leak Testing

IMPORTANT: General Motors vehicles are now manufactured with fluorescent dye installed directly into the air conditioning (A/C) system.

The fluorescent dye mixes and flows with the polyalkylene glycol (PAG) oil throughout the refrigerant system.

Verifying some passive leaks may require using the **J 39400-A** , even though the A/C system contains fluorescent dye.

The only time that adding additional fluorescent dye is required is after flushing the A/C system.

Fluorescent Leak Detector

Fluorescent dye will assist in locating any leaks in the A/C system.

IMPORTANT: PAG oil is water soluble.

- Condensation on the evaporator core or the refrigerant lines may wash the PAG oil and fluorescent dye away from the actual leak. Condensation may also carry dye through the HVAC module drain.
- Leaks in the A/C system will be indicated in a light green or yellow color when using the leak detection lamp.

Use the leak detection lamp in the following areas:

- All fittings or connections that use seal washers or O-rings
- All of the A/C components
- The A/C compressor shaft seal
- The A/C hoses and pressure switches
- The HVAC module drain tube, if the evaporator core is suspected of leaking
- The service port sealing caps

  The sealing cap is the primary seal for the service ports.

- Follow the instructions supplied with the **J 42220** . See **Special Tools**.
- To prevent false diagnosis in the future, thoroughly clean the residual dye from any area where leaks were found. Use a rag and the approved **J 43872** . See **Special Tools**.

Fluorescent Dye Injection

IMPORTANT: Use only fluorescent dye approved by General Motors.

- **J 41447 can be poured directly into a removed A/C component. See Special Tools.**
- **J 46297-12 is injected into the low side port using . See Special Tools.J 46297 . See Special Tools.**

- Not all of the fluorescent dyes are compatible with PAG oil. Some types of dye decrease the oil viscosity or may chemically react with the oil.
- R-134A leak detection dye requires time to work. Depending upon the leak rate, a leak may not become visible for between 15 minutes and 7 days.

IMPORTANT: Do NOT overcharge the A/C system with dye. Use only one 7.39 ml (0.25 oz) charge.

- To prevent false diagnosis, thoroughly clean any residual dye from the service port with a rag and the approved fluorescent dye cleaner **J 43872** . See **Special Tools**.

Halogen Leak Detector

CAUTION: Do not operate the detector in a combustible atmosphere since its sensor operates at high temperatures or personal

injury and/or damage to the equipment may result.

Ensure that the vehicle has at least 0.45 kg (1 lb) of refrigerant in the A/C refrigeration system in order to perform a leak test. Refer to **Refrigerant Recovery and Recharging** for recharging the A/C system.

IMPORTANT: Halogen leak detectors are sensitive to the following items:

- **Windshield washing solutions**
- **Many solvents and cleaners**
- **Some adhesives used in the vehicle**

Clean and dry all surfaces in order to prevent a false warning. Liquids will damage the detector.

IMPORTANT: Follow a continuous path in order to ensure that you will not miss any possible leaks. Test all areas of the system for leaks.

Follow the instructions supplied with the **J 39400-A** .

AIR CONDITIONING (A/C) SYSTEM PERFORMANCE TEST

Test Description

This test measures the operating efficiency of the A/C system under the following conditions:

- The current ambient air temperature
- The current relative humidity
- The high side pressure of the A/C system
- The low side pressure of the A/C system
- The temperature of the air being discharged into the passenger compartment

The numbers below refer to the step numbers on the diagnostic table.

1: This step determines if the A/C system has at least the minimum refrigerant charge required to operate the system without damage.

2: This step measures the performance of the A/C system.

3: This step is to allow for vehicle variations as well as high ambient temperatures.

Air Conditioning (A/C) System Performance Test

Step	Action	Values	Yes	No
IMPORTANT: • **The ambient air temperature must be at least 16°C (60°F).** • **Do not induce additional air flow across the front of the vehicle during the test.** • **If you were sent here from a DTC diagnostic table, clear the DTC upon completion of this test.** • **Allow the vehicle to adjust to ambient temperature.** • **The outside air temperature sensor must be updated prior to performing the A/C Performance Test to allow the engine control module (ECM) to update to the current ambient temperature.**				

1	1. To activate the outside air temperature (OAT) sensor instant update feature, refer to **Scan Tool Output Controls** in HVAC Systems - Automatic or perform the following procedure:
	  1. Put the ignition to the ON position.
	  2. Press the following 3 buttons simultaneously:
	  • Fan Up
	  • Front Defrost
	  • Rear Defog
	2. Park the vehicle inside or in the shade.
	3. Open the windows in order to ventilate the interior of the vehicle.
	4. If the A/C system was operating, allow the A/C system to equalize for about 2 minutes.
	5. Turn OFF the ignition.
	6. Install the **J 43600** ACR 2000 Air Conditioning Service Center. See **Special Tools**.
	7. Record the ambient air temperature displayed on the **J 43600** . See **Special Tools**.
	8. Record the low and high side
		Greater than 16°C (60°F) - 345 kPa (50 psi)
		Greater than 24°C (75°F) - 483 kPa (70 psi)
		Greater than 33°C (90°F) - 690 kPa (100 psi)		

	STATIC pressure readings. Are both the low side and high side pressures within the specified value?		Go to **Step 2**	Go to **Leak Testing**
2	**IMPORTANT:** **Record the relative humidity and the ambient air temperature at the time of the test.** 1. Close the vehicle doors and windows. 2. Open the drivers door window 12.7-15.2 cm (5-6 in). 3. Install the temperature probes of the **J 43600** in the left and right center panel air outlets. See **Special Tools**. 4. Apply the parking brake. 5. Place the transaxle in PARK. 6. Start the engine. 7. Select the following HVAC control settings: • A/C setting • Recirculation mode • Maximum blower speed • Panel mode • Coldest temperature setting • All panel outlets are Open 8. Using the scan tool, command the engine cooling fan to 50 percent for ambient temperatures below 32.2°C (90°F) and 90 percent for ambient temperatures above 32.2°C (90°F). 9. Operate the A/C system for 5 minutes. 10. Inspect A/C components for the following conditions:	-		

	• Abnormal frost areas • Unusual noises **IMPORTANT:** **Press the RESET button, before using the print function of the J 43600 . See Special Tools.** 11. Print the following information: • The panel outlet air temperature • The low-side pressure • The high-side pressure 12. Compare the low and high side pressures and the panel output temperature to the table below. Does all the data recorded fall within the specified ranges of the table below?		Go to **Step 8**	Go to **Step 3**
3	If the pressures and temperatures recorded do not fall within the specified ranges: 1. Continue to operate the A/C system for an additional 5 minutes. 2. RESET the **J 43600** and record the pressures and temperature again. See **Special Tools**. 3. Compare the low and high side pressures and the panel output temperature to the table below. Does all the data recorded fall within the specified ranges of the table below?	-	Go to **Step 8**	Go to **Step 4**
4	Do the high and low side pressures fall within the specified ranges, but the panel outlet temperature do not?	-	Go to **Air Conditioning (A/C) Diagnostics -**	

			Pressure Zone A	Go to **Step 5**
5	Is the low side pressure greater than the specified range, but the high side pressure within or less than the specified range?	-	Go to **Air Conditioning (A/C) Diagnostics - Pressure Zone B**	Go to **Step 6**
6	Are the low and high side pressures both greater than the specified ranges?	-	Go to **Air Conditioning (A/C) Diagnostics - Pressure Zone C**	Go to **Step 7**
7	Is the high side pressure greater than the specified range, but the low side pressure is within or less than the specified range?	-	Go to **Air Conditioning (A/C) Diagnostics - Pressure Zone D**	Go to **Step 8**
8	Operate the system in order to verify the test results. Did you find the same results?	-	System OK	Go to **Symptoms - HVAC Systems - Automatic** in HVAC Systems - Automatic

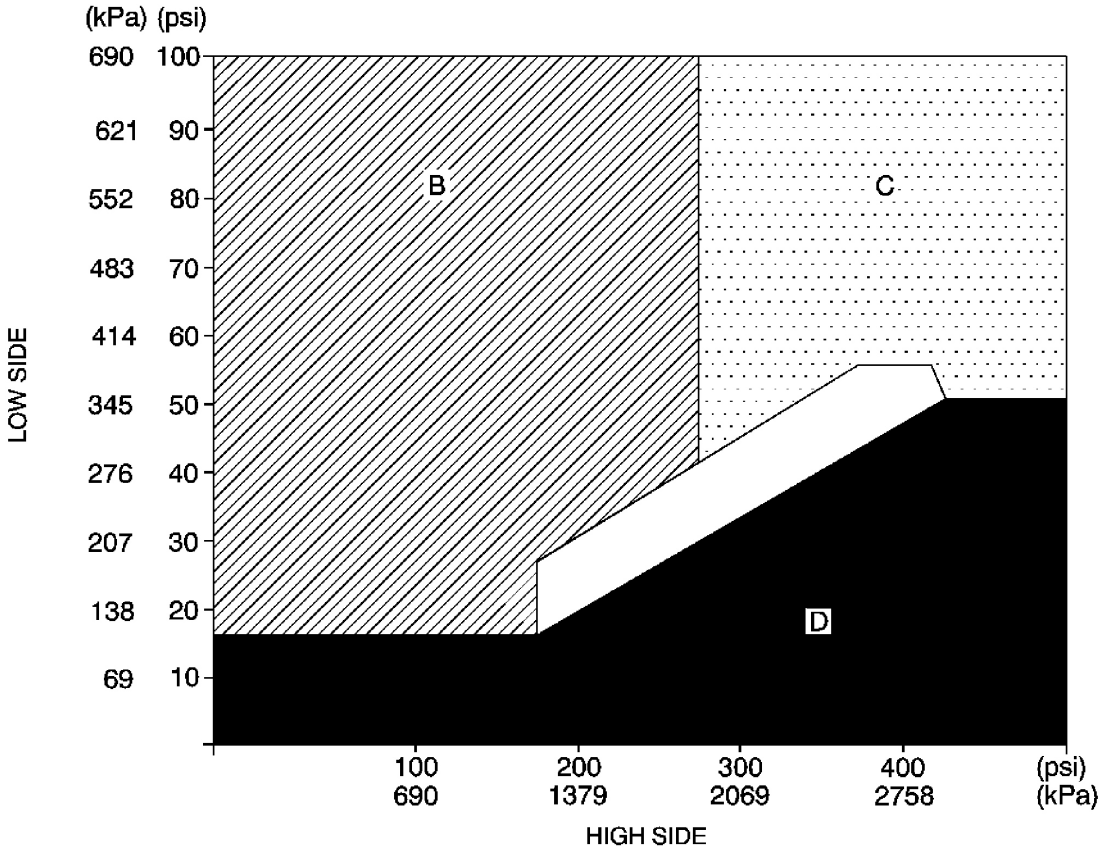

Fig. 1: A/C System Pressure - Zone Classification
Courtesy of GENERAL MOTORS CORP.

A/C Performance Table

Ambient Air Temperature	Relative Humidity	Service Port Pressure		Maximum Left Center Discharge Air Temperature
		Low Side	High Side	
13-18°C (55-65°F)	0-100%	150-194 kPa (22-28 psi)	1250-1570 kPa (181-228 psi)	8°C (46°F)
18-24°C (65-75°F)	Below 40%	150-230 kPa (22-33 psi)	1430-1780 kPa (208-258 psi)	10°C (50°F)
	Above 40%	153-259 kPa (23-38 psi)	1460-2000 kPa (212-290 psi)	13°C (55°F)
	Below 35%	172-256 kPa (25-37 psi)	1570-1940 kPa (228-282 psi)	12°C (54°F)

24-29°C (75-85°F)	35-60%	187-273 kPa (27-40 psi)	1670-2080 kPa (242-302 psi)	14°C (57°F)
	Above 60%	198-306 kPa (29-44 psi)	1750-2360 kPa (254-343 psi)	17°C (63°F)
29-35°C (85-95°F)	Below 30%	194-284 kPa (28-41 psi)	1670-2090 kPa (242-303 psi)	14°C (57°F)
	30-50%	211-315 kPa (31-46 psi)	1810-2370 kPa (263-344 psi)	18°C (64°F)
	Above 50%	233-362 kPa (34-53 psi)	2000-2790 kPa (290-405 psi)	22°C (72°F)
35-41°C (95-105°F)	Below 20%	213-297 kPa (31-43 psi)	1730-2100 kPa (251-305 psi)	15°C (59°F)
	20-40%	228-337 kPa (33-49 psi)	1870-2470 kPa (271-358 psi)	19°C (66°F)
	Above 40%	259-377 kPa (38-55 psi)	2150-2840 kPa (312-412 psi)	23°C (73°F)
41-46°C (105-115°F)	Below 20%	236-320 kPa (34-46 psi)	1830-2220 kPa (266-322 psi)	17°C (63°F)
	Above 20%	257-368 kPa (37-53 psi)	2020-2670 kPa (293-388 psi)	22°C (72°F)
46-49°C (115-120°F)	Below 30%	280-361 kPa (41-52 psi)	2140-2550 kPa (311-370 psi)	21°C (70°F)

AIR CONDITIONING (A/C) DIAGNOSTICS - PRESSURE ZONE A

Air Conditioning (A/C) Diagnostics - Pressure Zone A

Step	Action	Value	Yes	No
DEFINITION: The high and low side pressures may be normal or slightly less than normal. • Air Delivery Concern • Slight Refrigerant Under Charge • Refrigerant Contamination				
1	Were you sent here from the A/C System Performance Test?	-	Go to **Step 2**	Go to **Air Conditioning (A/C) System Performance Test**
	Refer to the panel air outlet temperatures			

2	recorded during the A/C system performance test. Does the discharge air temperature between the right and left center panel outlets vary by more than 2-3°C (3-4°F)?	-	Go to **Step 7**	Go to **Step 3**
3	Did the customer mention that the A/C system output temperatures are good at first, but then turn warm during extended drives?	-	Go to **Step 4**	Go to **Step 5**
4	Increase engine speed to 2000 RPM. During extended operation of the A/C system, does the low side pressure decrease?	-	Go to **Air Conditioning (A/C) Diagnostics - Pressure Zone D**	Go to **Step 5**
5	Refer to the pressures recorded during the A/C system performance test. Inspect for the following conditions: **CAUTION:** **Refer to Moving Parts and Hot Surfaces Caution in Cautions and Notices.** • The high side pressure is slightly greater than the specified pressure ranges but still within Zone A on the A/C Pressure-Zone Classification Chart in the A/C System Performance Test. Refer to **Air Conditioning (A/C) System Performance Test**. • The discharge side of the compressor hose assembly is hot. • The suction side of the compressor hose assembly is cool. Do the listed conditions exist?	-	Go to **Step 7**	Go to **Step 6**

6	Refer to the pressures recorded during the A/C system performance test. Inspect for the following conditions: • The low side pressure is slightly lower than the specified pressure ranges but still within Zone A on the A/C Pressure-Zone Classification Chart in the A/C System Performance Test. Refer to **Air Conditioning (A/C) System Performance Test**. • The discharge side of the compressor hose assembly is warm-to-hot. • The suction side of the compressor hose assembly is cool-to-warm. Do the listed conditions exist?	-	Go to **Step 8**	Go to **Too Hot in Vehicle** in HVAC Systems - Automatic
7	The A/C system may be undercharged. 1. Leak test A/C system. Refer to **Leak Testing**. 2. Recharge the A/C system to specifications. Refer to **Refrigerant Recovery and Recharging**. Is the repair complete?	-	Go to **Step 14**	-
8	The A/C system may be contaminated. View the **J 43600** ACR 2000 information screen for detection of foreign gases in the A/C system. See **Special Tools**. Do foreign gases exist?	-	Go to **Step 9**	Go to **Step 10**
	1. Evacuate the A/C system to a scavenging tank. Refer to **Refrigerant Recovery and Recharging**.			

9	2. Recharge the A/C system to specifications. Is the repair complete?	-	Go to **Step 14**	-
10	The A/C system may contain too much moisture or air. 1. Evacuate and recharge the A/C system to specifications. Refer to **Refrigerant Recovery and Recharging**. 2. Operate the A/C system and inspect the panel outlet air temperatures. Refer to **Air Conditioning (A/C) System Performance Test**. Are the panel outlet temperatures within the specified ranges of the A/C Performance Test Table?	-	Go to **Step 14**	Go to **Step 11**
11	The A/C system may contain too much refrigerant oil. **IMPORTANT:** **Operate the A/C system on low, in order to enhance oil flow to the high side of the system.** 1. Operate the A/C system with the engine at idle speed and the blower speed on low for approximately 15 minutes. 2. Recover the refrigerant from the A/C system. Refer to **Refrigerant Recovery and Recharging**. 3. Remove the condenser. Refer to **Condenser Replacement**. 4. Drain and measure the refrigerant oil from the condenser.	150 ml (5 oz)		

	Was more than the specified amount of refrigerant oil drained from the condenser?		Go to **Step 12**	Go to **Step 13**
12	1. Install the condenser. Refer to **Condenser Replacement**. 2. Flush the A/C system. Refer to **Flushing**. 3. Recharge the A/C system. Refer to **Refrigerant Recovery and Recharging**. Are the repairs complete?	-	Go to **Step 14**	-
13	1. Add the specified amount of refrigerant oil to the condenser. Refer to **Refrigerant System Capacities**. 2. Install the condenser. Refer to **Condenser Replacement**. 3. Recharge the A/C system. Refer to **Refrigerant Recovery and Recharging**. Are the repairs complete?	-	Go to **Step 14**	-
14	Operate the system in order to verify the repair. Did you find and correct the condition?	-	System OK	Go to **Symptoms - HVAC Systems - Automatic**

AIR CONDITIONING (A/C) DIAGNOSTICS - PRESSURE ZONE B

Air Conditioning (A/C) Diagnostics - Pressure Zone B

Step	Action	Yes	No
DEFINITION: The low side pressure is higher than normal and the high side pressure is lower than normal. • Malfunctioning A/C Compressor			

- Refrigerant Under Charge

1	Were you sent here from the A/C System Performance Test?	Go to **Step 2**	Go to **Air Conditioning (A/C) System Performance Test**
2	After continued operation of the A/C system, do the low and the high side pressures equalize or become static?	Go to **Step 5**	Go to **Step 3**
3	Refer to the pressures recorded during the A/C System Performance Test. Inspect for the following conditions: **CAUTION:** **Refer to Moving Parts and Hot Surfaces Caution in Cautions and Notices.** • The low side pressure is equal to or greater than the specified pressure range of the A/C Performance Table. Refer to **Air Conditioning (A/C) System Performance Test**. • The high side pressure is less than the specified pressure range of the A/C Performance Table. Refer to **Air Conditioning (A/C) System Performance Test**. • The low side refrigerant line at the compressor feels cool-to-warm. • The high side refrigerant line at the compressor feels warm-to-hot. Do the listed conditions exist?	Go to **Step 5**	Go to **Step 4**
	Refer to the pressures recorded during the A/C System Performance Test. Inspect for the following conditions: **CAUTION:**		

4	**Refer to Moving Parts and Hot Surfaces Caution in Cautions and Notices.** • The low side pressure is greater than the specified pressure range of the A/C Performance Table. Refer to **Air Conditioning (A/C) System Performance Test**. • The high side pressure is less than the specified pressure range of the A/C Performance Table. Refer to **Air Conditioning (A/C) System Performance Test**. • The low side refrigerant line at the compressor feels warm. • The high side refrigerant line at the compressor feels warm to hot. Do the listed conditions exist?	Go to **Step 5**	Go to **Step 6**
5	The A/C system has a low refrigerant charge. Evacuate and recharge the A/C system. Refer to **Refrigerant Recovery and Recharging**. Is the procedure complete?	Go to **Step 11**	-
6	The A/C compressor is malfunctioning. Remove the refrigerant filter and inspect for contamination. Refer to **Air Conditioning (A/C) Refrigerant Filter Replacement**. Did you find metal flakes on the refrigerant filter?	Go to **Step 8**	Go to **Step 7**
7	Inspect the refrigerant filter for a brown, powdery residue indicating desiccant in the A/C system. Is a brown, powdery residue present?	Go to **Step 9**	Go to **Step 10**
8	1. Replace the refrigerant filter. Refer to **Air Conditioning (A/C) Refrigerant Filter Replacement**. 2. Evacuate and recharge the A/C system.		

	Refer to **Refrigerant Recovery and Recharging**. Is the repair complete?	Go to **Step 11**	-
9	1. Flush the A/C system. Refer to **Flushing**. 2. Replace the thermal expansion valve. Refer to **Thermal Expansion Valve Replacement**. 3. Replace the A/C compressor. Refer to **Compressor Replacement**. 4. Replace the condenser. Refer to **Condenser Replacement**. 5. Evacuate and recharge the A/C system. Refer to **Refrigerant Recovery and Recharging**. Is the repair complete?	Go to **Step 11**	-
10	1. Replace the A/C compressor. Refer to **Compressor Replacement**. 2. Evacuate and recharge the A/C system. Refer to **Refrigerant Recovery and Recharging**. Is the repair complete?	Go to **Step 11**	-
11	Operate the system in order to verify the repair. Did you find and correct the condition?	System OK	Go to **Symptoms - HVAC Systems - Automatic**

AIR CONDITIONING (A/C) DIAGNOSTICS - PRESSURE ZONE C

Air Conditioning (A/C) Diagnostics - Pressure Zone C

Step	Action	Yes	No
DEFINITION: The low and the high side pressures are both higher than normal. • Restricted Condenser Air Flow • Cooling Fan Malfunction • Expansion Device Malfunction			

1	Were you sent here from the A/C System Performance Test?	Go to **Step 2**	Go to **Air Conditioning (A/C) System Performance Test**
2	1. Start the engine. 2. Turn ON the A/C. 3. Inspect for proper cooling fan operation. Refer to **Cooling System Description and Operation** in Engine Cooling. Is the cooling fan ON and operating properly?	Go to **Step 3**	Go to **Step 5**
3	Visually inspect for the following conditions: • Damaged condenser cooling fins • Missing or misaligned air baffles • Restricted air flow Do any of these conditions exist?	Go to **Step 4**	Go to **Step 6**
4	Repair the air flow restriction. Is the repair complete?	Go to **Step 9**	-
5	Repair the fault to the cooling fan operation. Refer to **Cooling Fan Inoperative** in Engine Cooling. Is the repair complete?	Go to **Step 9**	-
6	**CAUTION:** **Refer to Moving Parts and Hot Surfaces Caution in Cautions and Notices.** Feel the liquid line on both sides of the expansion device.Are the temperatures on both sides of the expansion device similar?	Go to **Step 7**	Go to **Step 8**
7	Replace the damaged or faulty thermal expansion valve. Refer to **Thermal Expansion Valve Replacement**. Is the repair complete?	Go to **Step 9**	-
	Air is in the refrigerant system, or the system is		

8	overcharged. Refer to the view screen on **J 43600** ACR 2000 for foreign gas content in the refrigerant. See **Special Tools**. Recover and recharge the A/C system. Refer to **Refrigerant Recovery and Recharging**. Is the repair complete?	Go to **Step 9**	-
9	Operate the system in order to verify the repair. Did you find and correct the condition?	System OK	Go to **Symptoms - HVAC Systems - Automatic**

AIR CONDITIONING (A/C) DIAGNOSTICS - PRESSURE ZONE D

Air Conditioning (A/C) Diagnostics - Pressure Zone D

Step	Action	Yes	No
DEFINITION: The low side pressure is lower than normal and the high side pressure is higher than normal. • A restriction in the A/C system. • Debris in the system.			
1	Were you sent here from the A/C System Performance Test?	Go to **Step 2**	Go to **Air Conditioning (A/C) System Performance Test**
2	**CAUTION:** **Refer to Moving Parts and Hot Surfaces Caution in Cautions and Notices.** Feel the liquid line before the TXV.Is the liquid line cold before the TXV?	Go to **Step 3**	Go to **Step 8**
3	Feel along the surfaces of the following high side components: • The compressor discharge hose • The condenser • The liquid line between the condenser and the TXV		

	Did you detect an abrupt drop in temperature along the surfaces of any of the listed components?	Go to **Step 7**	Go to **Step 4**
4	1. Feel the liquid line at the TXV for extreme cold, possibly accompanied by heavy frost. 2. Feel along the liquid line beyond the TXV for warm temperature. Is the liquid line extremely cold at the TXV and warm beyond the TXV?	Go to **Step 11**	Go to **Step 5**
5	Feel along the surfaces of the following low side components: • The evaporator outlet tube between the evaporator core and the compressor • The compressor suction hose Did you feel an abrupt temperature change along the surfaces of any of the listed components?	Go to **Step 7**	Go to **Step 6**
6	Feel along the surfaces of the low and the high side components. • The evaporator outlet tube between the TXV and the compressor • The compressor discharge hose • The condenser Are the temperatures of these components only mildly warm?	Go to **Step 14**	Go to **Step 8**
7	1. Recover the refrigerant. Refer to **Refrigerant Recovery and Recharging**. 2. Remove the restriction from the component, or replace the component which produced an abrupt temperature		

	drop. Is the repair complete?	Go to **Step 17**	-
8	1. Recover the refrigerant and evacuate the system. Refer to **Refrigerant Recovery and Recharging**. 2. Record the weight of the recovered refrigerant. 3. Compare the weight of the recovered refrigerant with the system capacity. Refer to **Refrigerant System Capacities**. Is the weight of the recovered refrigerant charge greater than 75% of the total system capacity?	Go to **Step 9**	Go to **Step 10**
9	Recharge the A/C system. Refer to **Refrigerant Recovery and Recharging**. Is the operation complete?	Go to **Step 12**	-
10	1. Leak test the system. Refer to **Leak Testing**. 2. Repair any leaks. Is the repair complete?	Go to **Step 17**	-
11	The TXV is restricted. Replace the TXV. Refer to **Thermal Expansion Valve Replacement**. Are metal flakes present?	Go to **Step 12**	Go to **Step 13**
12	1. Remove the refrigerant filter. Refer to **Air Conditioning (A/C) Refrigerant Filter Replacement**. 2. Inspect the refrigerant filter for debris. Was there debris present?	Go to **Step 16**	Go to **Step 17**
13	If the refrigerant filter was restricted with a brown or black residue, perform the following procedure: 1. Flush the A/C system. Refer to **Flushing**.		

	2. Replace the condenser. Refer to **Condenser Replacement**. Are the repairs complete?	Go to **Step 17**	-
14	1. Recover the refrigerant. Refer to **Refrigerant Recovery and Recharging**. 2. Remove the compressor hose assembly from the compressor. Refer to **Compressor Hose Assembly Replacement**. 3. Inspect for the presence of debris in the compressor suction port. Is debris present in the compressor suction port?	Go to **Step 15**	Go to **Step 17**
15	1. Remove the debris from the suction port. 2. Inspect the TXV for damage or debris. Refer to **Thermal Expansion Valve Replacement**. Did you find evidence of damage or debris?	Go to **Step 17**	Go to **Step 16**
16	If a large amount of debris was collected from the refrigerant filter, perform the following procedure: 1. Replace the compressor. Refer to **Compressor Replacement**. 2. Replace the refrigerant filter. Refer to **Air Conditioning (A/C) Refrigerant Filter Replacement**. Is the repair complete?	Go to **Step 17**	-
17	Operate the system in order to verify the repair. Did you find and correct the condition?	System OK	Go to **Symptoms - HVAC Systems - Automatic**

HEATING PERFORMANCE DIAGNOSTIC

Heating Performance Diagnostic

Step	Action	Yes	No
DEFINITION: Heating system performance.			
1	Were you sent here from Symptoms or another diagnostic table?	Go to **Step 2**	Go to **Symptoms - HVAC Systems - Automatic** in HVAC Systems - Automatic
2	1. Start the engine. 2. Allow the engine to idle. Does the engine reach a normal operating temperature?	Go to **Step 3**	Go to **Step 9**
3	**CAUTION:** **Refer to Moving Parts and Hot Surfaces Caution in Cautions and Notices.** 1. Allow the engine to idle. 2. Select the FLOOR mode. 3. Select the minimum blower speed. 4. Select the warmest temperature setting. 5. Feel the temperature of the inlet and outlet heater hoses near the heater core. Does the inlet heater hose feel warmer than the outlet heater hose?	Go to **Step 7**	Go to **Step 4**
4	1. Install a thermometer into the center I/P panel air outlet. 2. Secure a thermometer to the heater core outlet hose. 3. Select the PANEL mode. 4. Select the maximum blower speed. 5. Select the warmest temperature setting. 6. Record the temperature at the following locations:		

	• The center I/P panel air outlet • The heater core outlet hose 7. Compare the recorded temperatures. Are the two temperature readings about equal?	Go to **Step 5**	Go to **Step 6**
5	1. Inspect and repair the following areas of the vehicle for cold air leaks: • The cowl • The recirculation door • The HVAC module case 2. Perform the necessary repairs. Are the repairs complete?	Go to **Step 10**	-
6	1. Inspect the temperature door operation. Refer to **Diagnostic System Check - Vehicle** in Vehicle DTC Information. 2. Perform any necessary repairs. Are the repairs complete?	Go to **Step 10**	-
7	1. Turn OFF the engine. 2. Backflush the heater core. 3. Start the engine. 4. Select the FLOOR mode. 5. Select the minimum blower speed. 6. Select the warmest temperature setting. 7. Feel the temperature of the inlet and outlet heater hoses near the heater core. Does the inlet heater hose feel warmer than the outlet heater hose?	Go to **Step 8**	Go to **Step 10**
8	Replace the heater core. Refer to **Heater Core Replacement**. Is the repair complete?	Go to **Step 10**	-
9	Repair the low engine temperature concern. Refer to **Engine Fails To Reach Normal**		

	Operating Temperature in Engine Cooling. Is the repair complete?	Go to **Step 10**	-
10	Operate the system in order to verify the repair. Did you find and correct the condition?	System OK	Go to **Step 2**

DEFROSTING INSUFFICIENT

Defrosting Insufficient

Step	Action	Yes	No
DEFINITION: Time required to defrost the windshield is longer than normal.			
1	Were you sent here from Symptoms or another diagnostic table?	Go to **Step 2**	Go to **Symptoms - HVAC Systems - Automatic** in HVAC Systems-Automatic
2	1. Start the engine. 2. Select the DEFROST mode. 3. Select the maximum blower speed. Does sufficient air flow from the defroster outlets?	Go to **Step 3**	Go to **Step 10**
3	Measure the engine operating temperature. Does engine reach a normal operating temperature?	Go to **Step 4**	Go to **Step 8**
4	1. Select the minimum blower speed. 2. Select the maximum temperature setting. **CAUTION:** **Refer to Moving Parts and Hot Surfaces Caution in Cautions and Notices.** 3. Feel the temperature of the inlet and outlet hoses near the heater core. Does the inlet hose feel warmer than the outlet hose?	Go to **Step 11**	Go to **Step 5**
	Test the operation of the A/C compressor		

5	clutch. Does the A/C compressor clutch engage?	Go to **Step 7**	Go to **Step 6**
6	Repair the A/C compressor clutch concern. Refer to **HVAC Compressor Clutch Does Not Engage** in HVAC Systems-Automatic. Is the repair complete?	Go to **Step 14**	-
7	Perform the A/C system performance test. Refer to **Air Conditioning (A/C) System Performance Test**. Is the A/C system operating within the specifications?	Go to **Step 9**	Go to **Step 12**
8	Repair the low engine temperature concern. Refer to **Engine Fails To Reach Normal Operating Temperature** in Engine Cooling. Is the repair complete?	Go to **Step 14**	-
9	Inspect for correct operation of the air inlet door. Is the air inlet door operating correctly?	Go to **Step 14**	Go to **Step 13**
10	Repair the air delivery concern. Refer to **Air Delivery Improper** in HVAC Systems-Automatic. Is the repair complete?	Go to **Step 14**	-
11	Repair the heating concern. Refer to **Heating Performance Diagnostic**. Is the repair complete?	Go to **Step 14**	-
12	Repair the A/C performance concern. Refer to **Symptoms - HVAC Systems - Automatic** in HVAC Systems-Automatic. Is the repair complete?	Go to **Step 14**	-
13	Repair the air inlet door concern. Refer to **Air Recirculation Malfunction** in HVAC Systems-Automatic. Is the repair complete?	Go to **Step 14**	-
14	Operate the system in order to verify the repair. Did you find and correct the problem?	System OK	Go to **Step 2**

NOISE DIAGNOSIS - BLOWER MOTOR

Noise Diagnosis - Blower Motor

Step	Action	Yes	No
DEFINITION: Noise originating from the blower motor.			
1	Were you sent here from Symptoms or another diagnostic table?	Go to **Step 2**	Go to **Symptoms - HVAC Systems - Automatic** in HVAC Systems - Automatic
2	Inspect the air inlet grille for debris. Is debris present?	Go to **Step 8**	Go to **Step 3**
3	1. Sit inside the vehicle. 2. Close the vehicle doors and windows. 3. Turn ON the ignition, with the engine OFF. 4. Cycle the blower motor through all of the speeds and modes in order to determine where and when the noise occurs. Is a noise evident during the blower operation?	Go to **Step 4**	Go to **Step 11**
4	Inspect for excessive vibration at each blower motor speed by feeling the blower case. Is excess vibration present?	Go to **Step 6**	Go to **Step 5**
5	Listen to the blower motor at each speed. Is the blower motor making a squeaking or chirping noise?	Go to **Step 9**	Go to **Step 11**
6	1. Remove the blower motor. Refer to **Blower Motor Replacement**. 2. Inspect the blower motor impeller for deposits of foreign material. 3. Inspect the blower motor for deposits of foreign material. Did you find any foreign material on the blower motor or blower motor impeller?	Go to **Step 8**	Go to **Step 7**
	Inspect the blower motor for the following conditions:		

7	• Cracked blades • A loose impeller retainer • Improper impeller alignment Did you find any of these conditions?	Go to **Step 9**	Go to **Step 10**
8	Remove the foreign material. Is the action complete?	Go to **Step 10**	-
9	Replace the blower motor. Refer to **Blower Motor Replacement**. Is the repair complete?	Go to **Step 11**	-
10	Install the blower motor. Refer to **Blower Motor Replacement**. Is the action complete?	Go to **Step 11**	-
11	Operate the system in order to verify the repair. Did you find and correct the condition?	System OK	Go to **Step 2**

NOISE DIAGNOSIS - AIR CONDITIONING (A/C) SYSTEM

Noise Diagnosis - Air Conditioning (A/C) System

Step	Action	Yes	No
DEFINITION: Noise originating from the A/C compressor, drive belt or the A/C lines.			
1	Were you sent here from Symptoms or another diagnostic table?	Go to **Step 2**	Go to **Symptoms - HVAC Systems - Automatic** in HVAC Systems - Automatic
2	1. A/C system noises can be generally categorized into three areas: • Screeching, Squealing, Chirping noises • Moaning noises • Vibration/Rattle noises 2. Start the engine. 3. Ensure that the A/C is ON.		

	Do you hear a screeching, squealing noise when you engage the A/C?	Go to **Step 3**	Go to **Step 9**
3	With the engine OFF, inspect the drive belt for excessive wear. Refer to **Drive Belt Excessive Wear Diagnosis** in Engine Mechanical - 4.6L. Is the drive belt excessively worn?	Go to **Step 18**	Go to **Step 4**
4	Inspect the drive belt tensioner. Refer to **Drive Belt Tensioner Diagnosis** in Engine Mechanical - 4.6L. Is the drive belt tension correct?	Go to **Step 5**	Go to **Step 19**
5	Inspect the drive belt for excessive oil coverage. Is the drive belt covered with oil?	Go to **Step 17**	Go to **Step 6**
6	1. Start the engine. 2. Ensure that the A/C is ON. 3. Inspect the compressor and the clutch. Is the A/C compressor locked up?	Go to **Step 23**	Go to **Step 7**
7	Is the A/C compressor clutch slipping?	Go to **Step 23**	Go to **Step 8**
8	**CAUTION:** **Refer to Moving Parts and Hot Surfaces Caution in Cautions and Notices.** Using a stethoscope, listen to the A/C compressor for any abnormal noises.Is the compressor causing an abnormal noise?	Go to **Step 15**	Go to **Step 10**
9	Does a moaning noise exist when the A/C clutch is engaged?	Go to **Step 10**	Go to **Step 12**
10	Listen to the A/C compressor components and mounting for noise concerns using a stethoscope. Are any of these components loose, damaged or excessively worn?	Go to **Step 20**	Go to **Step 11**
11	1. Start the engine. 2. Engage the A/C compressor clutch. 3. Using a stethoscope, move around the entire refrigerant plumbing system. Listening for any abnormal noises caused by a component of the A/C system touching		

	another component. Are any of the A/C components grounding out and causing a vibration noise?	Go to **Step 22**	Go to **Step 13**
12	Does a vibration or rattle noise exist when the A/C clutch is engaged?	Go to **Step 13**	Go to **Step 14**
13	Does the noise stop when the A/C clutch is disengaged?	Go to **Step 15**	Go to **Step 24**
14	1. Idle the engine in PARK with the A/C compressor clutch engaged. 2. Using a stethoscope, move around the entire A/C system listening for any abnormal noises caused by a component. Do any of the A/C components cause an abnormal noise?	Go to **Step 21**	Go to **Step 24**
15	Verify that the A/C system is properly charged. Refer to **Refrigerant System Capacities**. Is the A/C system properly charged?	Go to **Step 24**	Go to **Step 16**
16	Recharge the A/C system to specification. Refer to **Refrigerant Recovery and Recharging**. Is the abnormal compressor noise still present?	Go to **Step 23**	Go to **Step 25**
17	Repair the oil leak. Refer to the appropriate repair procedure in Engine Mechanical - 4.6L. Is the repair complete?	Go to **Step 25**	-
18	Replace the accessory drive belt. Refer to **Drive Belt Replacement - Accessory** in Engine Mechanical - 4.6L. Is the replacement complete?	Go to **Step 25**	-
19	Replace the accessory drive belt tensioner. Refer to **Drive Belt Tensioner Replacement - Accessory** in Engine Mechanical - 4.6L. Is the replacement complete?	Go to **Step 25**	-
20	Repair or replace the A/C compressor mounting component. Is the repair complete?	Go to **Step 25**	-
21	Repair or replace the component which is causing the moaning concern as needed.		

	Is the repair complete?	Go to **Step 25**	-
22	Correctly route or insulate the A/C component. Is the repair complete?	Go to **Step 25**	-
23	Replace the A/C compressor. Refer to **Compressor Replacement**. Is the replacement complete?	Go to **Step 25**	-
24	The concern may be caused by an engine related component. Refer to **Vibration Analysis - Engine** in Vibration Diagnosis and Correction. Did you find and correct the condition?	Go to **Step 25**	-
25	Operate the system in order to verify the repair. Did you find and correct the condition?	System OK	Go to **Step 2**

NOISE DIAGNOSIS - HVAC MODULE

Noise Diagnosis - HVAC Module

Step	Action	Yes	No
DEFINITION: Noise originating from the HVAC module.			
1	Were you sent here from Symptoms or another diagnostic table?	Go to **Step 2**	Go to **Symptoms - HVAC Systems - Automatic** in HVAC Systems - Automatic
2	1. Start the engine. 2. Cycle through all of the following: • Blower motor speeds • HVAC modes • Temperature control settings 3. Determine the type of noise: • Scrape, pop • Tick/click, chirp or groaning • Air rush/whistle Is a scrape or pop noise evident when selecting modes or temperature settings?	Go to **Step 6**	Go to **Step 3**

3	Is a tick/click, chirping, groaning or scraping noise present, but decreases as blower motor speed is decreased?	Go to **Step 6**	Go to **Step 4**
4	Is an air rush/whistle noise evident in all modes but not all temperature settings?	Go to **Step 6**	Go to **Step 5**
5	Is an air rush/whistle noise evident only in defrost or floor mode?	Go to **Step 6**	Go to **Step 6**
6	Remove the I/P Assembly. Refer to **Instrument Panel (I/P) Carrier Replacement** in Instrument Panel, Gages and Console. Is the action complete?	Go to **Step 7**	-
7	1. Inspect the mode valve assembly for proper operation. 2. Inspect the ducts for obstructions or foreign materials. Were any of these conditions found?	Go to **Step 10**	Go to **Step 8**
8	Inspect the mode valve assembly and temperature doors and seals for warping or cracking. Are the mode valve assembly and temperature doors in normal condition?	Go to **Step 11**	Go to **Step 9**
9	Replace the appropriate component. Is the repair complete?	Go to **Step 11**	-
10	Remove any obstructions or foreign material found. Is the action complete?	Go to **Step 11**	-
11	Install the I/P assembly. Refer to **Instrument Panel (I/P) Carrier Replacement** in Instrument Panel, Gages and Console. Is the action complete?	Go to **Step 12**	-
12	Operate the system to verify the repair. Did you find and correct the condition?	System OK	Go to **Step 2**

ODOR DIAGNOSIS

Odor Diagnosis

Step	Action	Yes	No

DEFINITION: Odor originating or noticed through the HVAC system.

1	Were you sent here from Symptoms or another diagnostic table?	Go to **Step 2**	Go to **Symptoms - HVAC Systems - Automatic** in HVAC Systems - Automatic.
2	1. Sit inside the vehicle. 2. Close all of the doors and windows. 3. Start the engine. 4. Allow the engine idle at normal operating temperature. 5. Select the maximum blower speed. 6. Select the PANEL air outlet mode. 7. Select the coldest temperature setting. 8. Cycle through all of the blower speeds, modes and temperatures to define what type of odor is present. • Musty smell • Coolant smell • Oil smell Does the odor have a musty smell?	Go to **Step 3**	Go to **Step 8**
3	Inspect the HVAC filter and the air inlet grille for debris. Is debris present?	Go to **Step 4**	Go to **Step 5**
4	Remove any debris. Is the action complete?	Go to **Step 15**	-
5	Inspect for wet carpeting. Is the carpet wet?	Go to **Step 6**	Go to **Step 14**
6	Inspect for the following conditions: • Water leaks around the windshield • Blockage of the HVAC module drain • Leaks around the door seals		

	Is a leak present?	Go to **Step 7**	Go to **Step 14**
7	Repair the leak as necessary. Is the repair complete?	Go to **Step 15**	-
8	Does the odor have a coolant smell?	Go to **Step 9**	Go to **Step 12**
9	Inspect the cooling system for leaks. Refer to **Loss of Coolant** in Engine Cooling. Is a leak present?	Go to **Step 10**	Go to **Step 12**
10	Inspect for coolant leaking inside the vehicle or for a film build-up on the windshield. Is the condition present?	Go to **Step 11**	Go to **Step 15**
11	Inspect and if necessary replace the heater core. Refer to **Heater Core Replacement**. Is the repair complete?	Go to **Step 15**	-
12	Does the odor have an oily smell?	Go to **Step 13**	Go to **Step 15**
13	1. Inspect the engine compartment for any leaks. Refer to the following procedures: • **Oil Leak Diagnosis** in Engine Mechanical - 4.6L. • **Fluid Leak Diagnosis** in Automatic Transmission - 5L50- E. • **Power Steering Fluid Leaks** in Power Steering System. 2. Repair any oil leaks. Is the repair complete?	Go to **Step 15**	-
14	A musty odor can be caused by mold or mildew build-up on the evaporator or the heater core or inside of the HVAC module. Refer to **Odor Correction**. Is the action complete?	Go to **Step 15**	-
15	Operate the system in order to verify the repair. Did you find and correct the condition?	System OK	Go to **Step 2**

REPAIR INSTRUCTIONS

ODOR CORRECTION

Eliminating Air Conditioning Odor

Odors may be emitted from the air conditioning system primarily at start up in hot, humid climates. The following conditions may cause the odor:

- Debris is present in the HVAC module
- Microbial growth on the evaporator core

When the blower motor fan is turned on, the microbial growth may release an unpleasant musty odor into the passenger compartment. To remove odors of this type, the microbial growth must be eliminated. Perform the following procedure:

Deodorize the evaporator core using Deodorizing Aerosol Kit.

Perform the following steps in order to deodorize the A/C system:

1. Ensure that the plenum which draws outside air into the HVAC module is clear of debris.
2. Disable the A/C compressor clutch operation by disconnecting the clutch coil electrical connector.
3. Dry the evaporator core by performing the following steps:
    1. Start the engine.
    2. Select the warmest temperature setting.
    3. Select the recirculation mode.
    4. Run the blower motor on high for 10 minutes.
4. Locate an area in the air conditioning duct between the blower motor and the evaporator core downstream of the blower motor.
5. Drill a 3.175 mm (0.125 in) hole where the hole will not interfere with or damage the following components:
    - The blower motor
    - The evaporator core
    - Any other operating part the of system
6. Wear safety goggles and latex gloves in order to perform the following actions:
    1. Select the maximum blower speed.
    2. Insert the deodorizer extension tube into the hole to the mark on the extension tube.
    3. Use short spray bursts and vary the direction of spray for a 2-3 minute period of time.
7. Shut the engine OFF. Allow the vehicle to sit for 3-5 minutes.
8. Seal the 3.175 mm (0.125 in) hole with body sealer or RTV gasket compound.

9. Start the engine.
10. Operate the blower motor on high for 15-20 minutes to dry.
11. Reconnect the A/C compressor clutch coil electrical connector.
12. Verify proper A/C clutch operation.

REFRIGERANT RECOVERY AND RECHARGING

Tools Required

- **J 43600** ACR 2000 Air Conditioning Service Center. See **Special Tools**.
- **J 45037** A/C Oil Injector. See **Special Tools**.

CAUTION: Avoid breathing the A/C Refrigerant 134a (R-134a) and the lubricant vapor or the mist. Exposure may irritate the eyes, nose, and throat. Work in a well ventilated area. In order to remove R-134a from the A/C system, use service equipment that is certified to meet the requirements of SAE J 2210 (R-134a recycling equipment). If an accidental system discharge occurs, ventilate the work area before continuing service. Additional health and safety information may be obtained from the refrigerant and lubricant manufacturers.

CAUTION: For personal protection, goggles and gloves should be worn and a clean cloth wrapped around fittings, valves, and connections when doing work that includes opening the refrigerant system. If R-134a comes in contact with any part of the body severe frostbite and personal injury can result. The exposed area should be flushed immediately with cold water and prompt medical help should be obtained.

NOTE: R-134a is the only approved refrigerant for use in this vehicle. The use of any other refrigerant may result in poor system performance or component failure.

NOTE: To avoid system damage use only R-134a dedicated tools when servicing the A/C system.

NOTE: Use only Polyalkylene Glycol Synthetic Refrigerant Oil (PAG) for

internal circulation through the R-134a A/C system and only 525 viscosity mineral oil on fitting threads and O-rings. If lubricants other than those specified are used, compressor failure and/or fitting seizure may result.

NOTE: **R-12 refrigerant and R-134a refrigerant must never be mixed, even in the smallest of amounts, as they are incompatible with each other. If the refrigerants are mixed, compressor failure is likely to occur. Refer to the manufacturer instructions included with the service equipment before servicing.**

The **J 43600** is a complete air conditioning service center for R-134a. See **Special Tools**. The ACR 2000 recovers, recycles, evacuates and recharges A/C refrigerant quickly, accurately and automatically. The unit has a display screen that contains the function controls and displays prompts that will lead the technician through the recover, recycle, evacuate and recharge operations. R-134a is recovered into and charged out of an internal storage vessel. The ACR 2000 automatically replenishes this vessel from an external source tank in order to maintain a constant 5.45-6.82 kg (12-15 lbs) of A/C refrigerant.

The ACR 2000 has a built in A/C refrigerant identifier that will test for contamination, prior to recovery and will notify the technician if there are foreign gases present in the A/C system. If foreign gases are present, the ACR 2000 will not recover the refrigerant from the A/C system.

The ACR 2000 also features automatic air purge, single pass recycling and an automatic oil drain.

Refer to the **J 43600** ACR 2000 manual for operation and setup instruction. See **Special Tools**. Always recharge the A/C System with the proper amount of R-134a. Refer to **Refrigerant System Capacities** for the correct amount.

A/C Refrigerant System Oil Charge Replenishing

If oil was removed from the A/C system during the recovery process or due to component replacement, the oil must be replenished. Oil can be injected into a charged system using **J 45037** . See **Special Tools**. For the proper quantities of oil to add to the A/C refrigerant system, refer to **Refrigerant System Capacities**.

FLUSHING

Tools Required

- **J 41447** R-134A A/C Tracer Dye - Box of 24. See **Special Tools**.
- **J 42220** Universal 12V Leak Detection Lamp. See **Special Tools**.
- **J 43600** ACR 2000 Air Conditioning Service Center. See **Special Tools**.
- **J 45268** A/C Flushing Adapter Kit. See **Special Tools**.

IMPORTANT: Flushing with the J 43600 ACR 2000 is not intended to remove metal from the A/C system. See Special Tools.

Flushing is intended to remove the following:

- Contaminated PAG oil
- Desiccant, following a desiccant bag failure
- Overcharge of PAG oil
- Refrigerant contamination

Forward Flushing Setup

IMPORTANT: Forward flow refrigerant flushing is recommended for contaminated refrigerant or PAG oil.

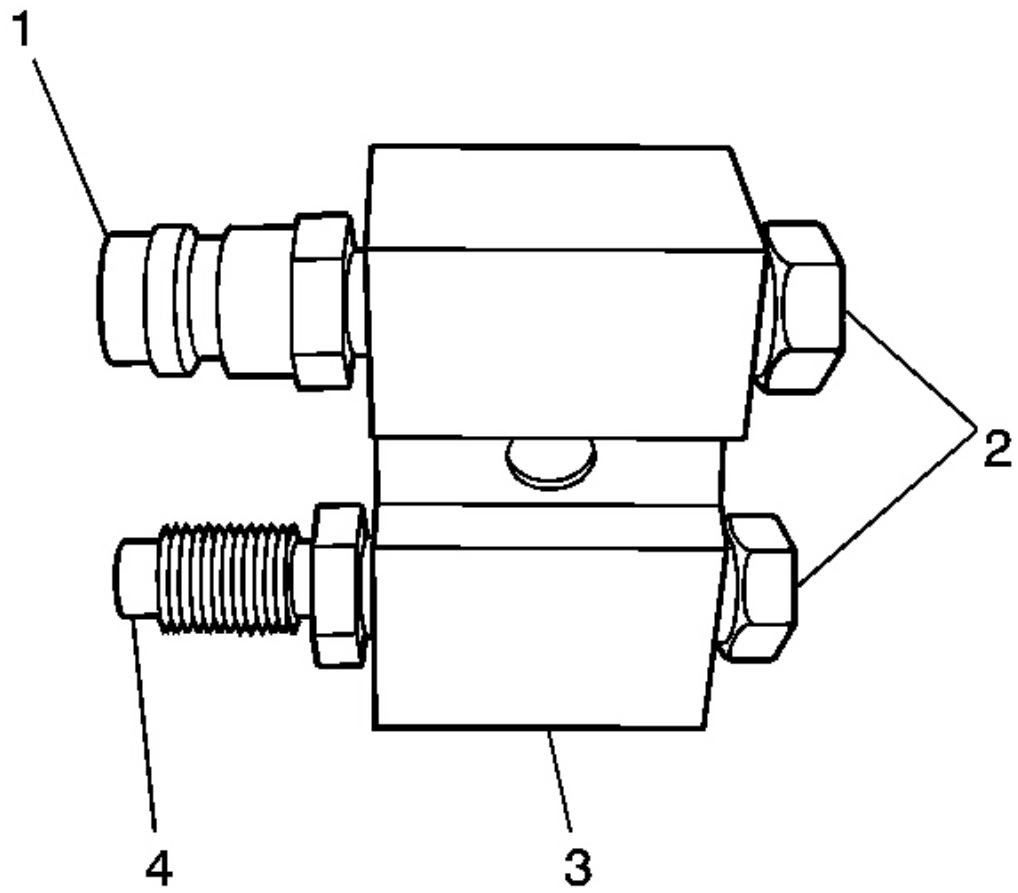

Fig. 2: Identifying J 45268-2 (3), J 45268-7 (1), J 45268-8 (4), & J 45268-9 (2)
Courtesy of GENERAL MOTORS CORP.

IMPORTANT: Inspect and lubricate the J 45268 fitting O-rings. See Special Tools. Refer to O-Ring Replacement.

1. Install both J 45268-9 (2) onto the J 45268-10 (3).
2. Install the J 45268-7 (4) onto the suction side of the J 45268-10 (3).
3. Install the J 45268-8 (1) onto the discharge side of the J 45268-10 (3).

Reverse Flushing Setup

IMPORTANT: Reverse flow refrigerant flush is recommended for desiccant bag failure. Replace the condenser/receiver dehydrator assembly when the A/C flush is complete and perform the following procedure:

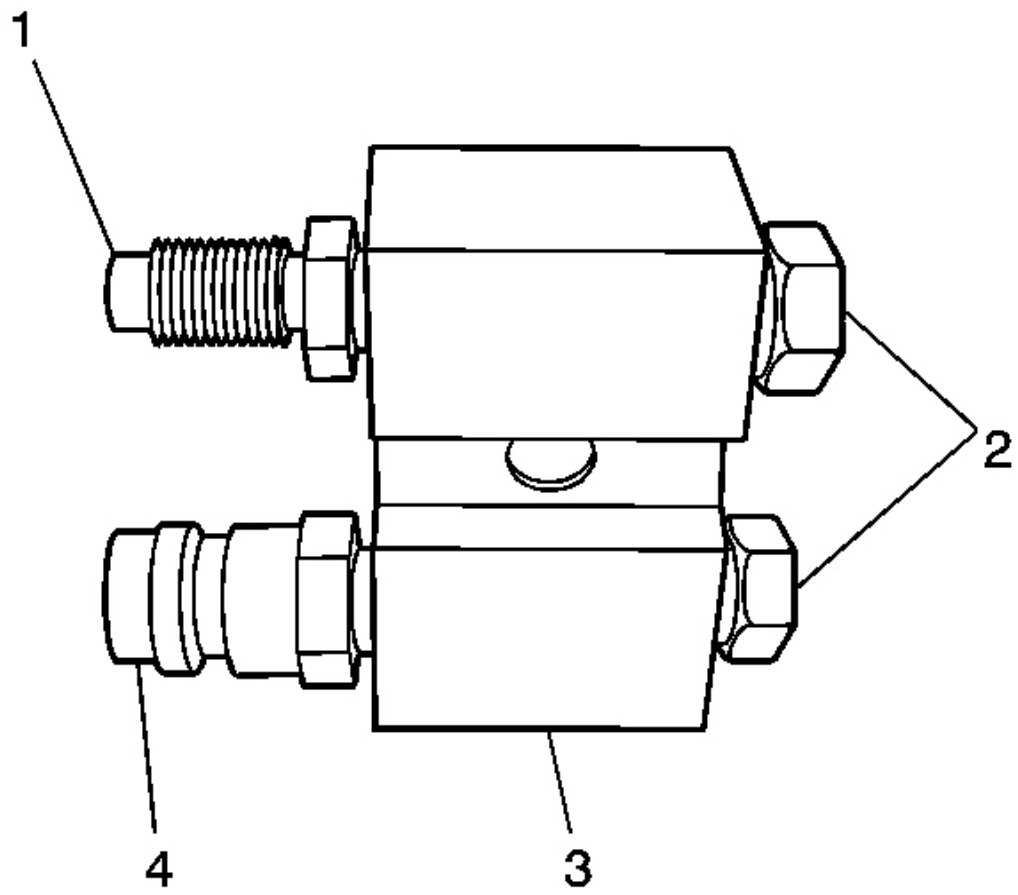

Fig. 3: Using J45268-9, J45268-8, J 45268-7, & J 45268-2
Courtesy of GENERAL MOTORS CORP.

IMPORTANT: Inspect and lubricate the J 45268 fitting O-rings. See Special Tools. Refer to O-Ring Replacement.

1. Install both J 45268-9 (2) onto the J 45268-10 (3).

2. Install the J 45268-8 (1) onto the suction side of the J 45268-10 (3).
3. Install the J 45268-7 (4) onto the discharge side of the J 45268-10 (3).

Flush Procedure

IMPORTANT: Warmer engine or ambient temperatures decreases the refrigerant recovery time during the A/C flush procedure.

1. Recover the refrigerant. Refer to **Refrigerant Recovery and Recharging**.
2. Remove the TXV. Refer to **Thermal Expansion Valve Replacement**.

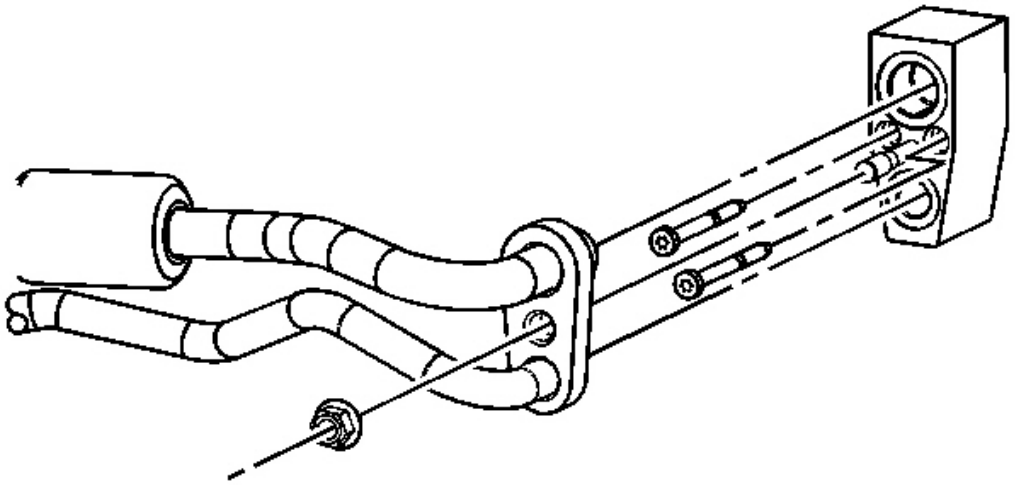

Fig. 4: J 45268-115 With TXV Components
Courtesy of GENERAL MOTORS CORP.

3. Install the stud onto the J 45268-115.
4. Install new sealing washers onto the evaporator core. Refer to **Sealing Washer Replacement**.
5. Install J 45268-115 in place of the TXV.

NOTE: Refer to Fastener Notice in Cautions and Notices.

6. Install TXV mounting bolts.

Tighten: Tighten the bolts to 7 N.m (62 lb in).

7. Install new washers onto the rear evaporator line assembly. Refer to **Sealing Washer Replacement**.
8. Connect the rear evaporator line assembly to the J 45268-115.
9. Install the TXV block fitting nut.

   Tighten: Tighten the nut to 20 N.m (15 lb ft).

10. Remove the A/C compressor. Refer to **Compressor Replacement**.
11. Remove the A/C refrigerant filter. Refer to **Air Conditioning (A/C) Refrigerant Filter Replacement**.

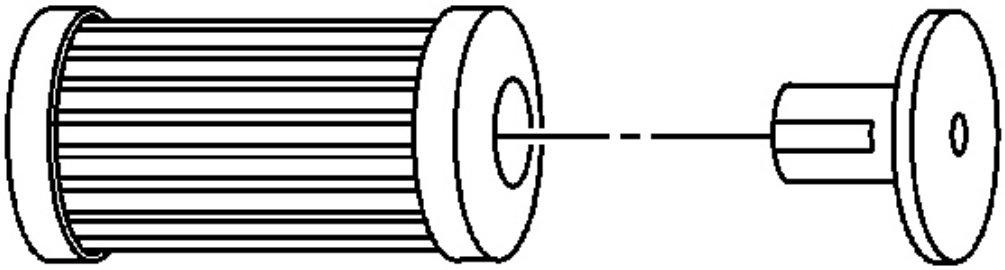

Fig. 5: View Of A/C Filter And Check Valve
Courtesy of GENERAL MOTORS CORP.

IMPORTANT: The filter inside J 45268-1 is serviceable. Remove and discard the check valve from the filter.

12. Service the filter with ACDelco P/N GF 470, before each flush.

IMPORTANT: Install new sealing washers onto the compressor hose assembly. Refer to Sealing Washer Replacement.
Assure that the suction and discharge ports on the J 45268-10 correspond to the suction and discharge ports on the compressor hose assembly.

13. Install the J 45268-10 to the compressor hose assembly.
14. Connect the J 45268-1 flush filter to the J 45268-7 flush adapter.

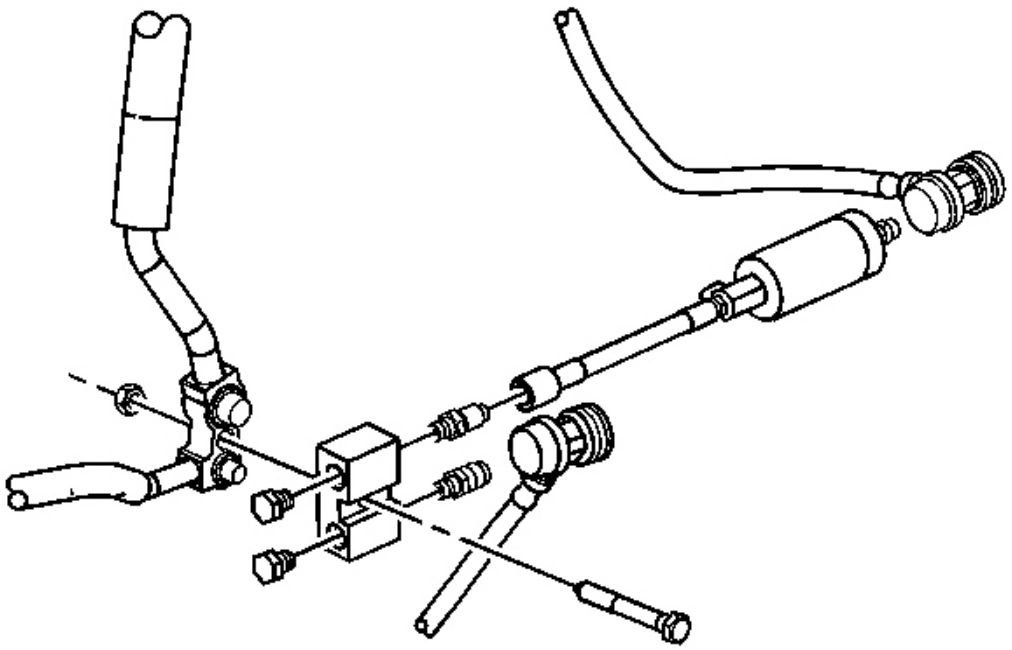

Fig. 6: J 43600, J 45268 Flush Adapters
Courtesy of GENERAL MOTORS CORP.

15. Connect the blue hose from the **J 43600** to J 45268-1 flush filter adapter. See **Special Tools**.
16. Connect the red hose from the **J 43600** to J 45268-8 flush adapter. See **Special Tools**.

IMPORTANT: Close the valve on the external refrigerant tank, before starting the flush process.

17. Flush the A/C system. Follow the instructions supplied with the **J 43600** . See **Special Tools**.
18. Disconnect the red hose from the **J 43600** to J 45268-8 flush adapter. See **Special Tools**.
19. Disconnect the blue hose from the **J 43600** to J 45268-1 flush filter adapter. See **Special**

Tools.

20. Disconnect the J 45268-1 flush filter from the J 45268-10 flush adapter.
21. Remove the J 45268-10 from the compressor hose assembly.

IMPORTANT: Flushing will remove all the PAG oil from the A/C system. The A/C system must be replenished with the correct amount of PAG oil.

22. If you will reinstall the removed A/C compressor, perform the following procedure:

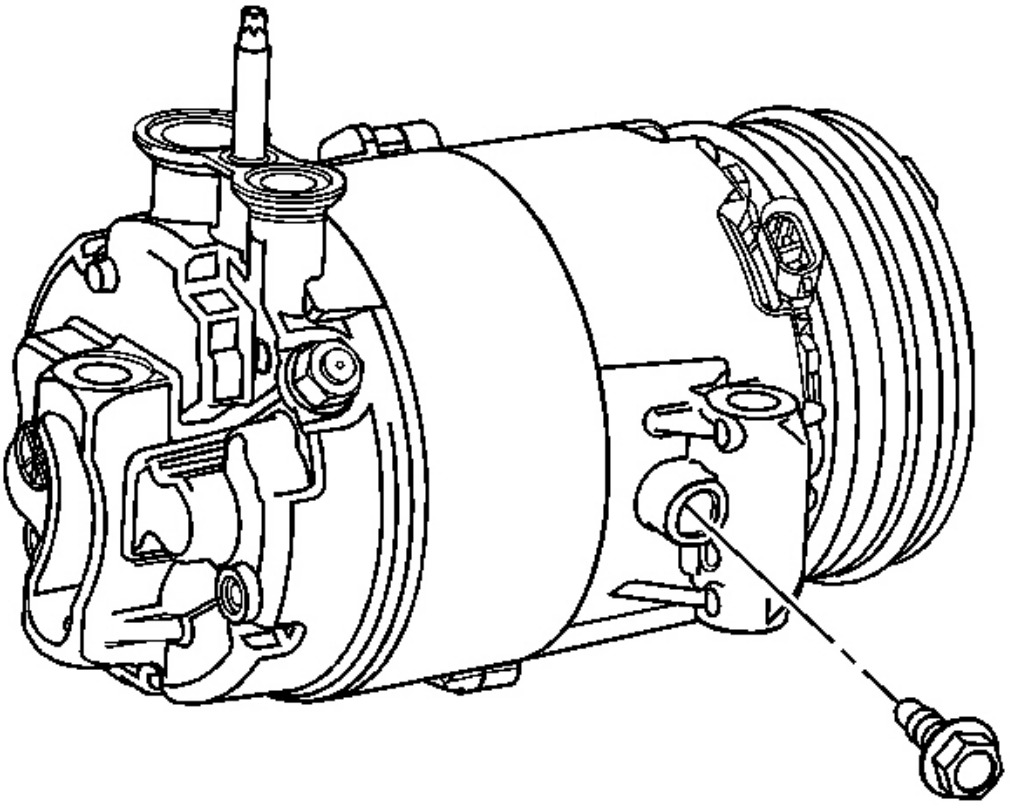

Fig. 7: Identifying A/C Compressor Drain Plug
Courtesy of GENERAL MOTORS CORP.

1. Remove the A/C compressor drain plug.

2. Drain the PAG oil from the A/C compressor. Rotate the compressor input shaft to assist in draining the PAG oil from the compressor.
3. Install the A/C compressor drain plug.

   Tighten: Tighten the drain plug to 15 N.m (11 lb ft).

4. Add the total system capacity of PAG oil to the crankcase of the A/C compressor. Refer to **Refrigerant System Capacities**.

   IMPORTANT: Flushing will remove the fluorescent leak detection dye from the A/C system.

5. Add one bottle of **J 41447** directly to the A/C compressor. See **Special Tools**.

IMPORTANT: A new service compressor is shipped with a full charge of PAG oil. Refer to Refrigerant System Capacities.

23. Install the A/C compressor. Refer to **Compressor Replacement**.
24. Install the A/C refrigerant filter. Refer to **Air Conditioning (A/C) Refrigerant Filter Replacement**.
25. Remove the TXV block fitting nut.
26. Disconnect the rear evaporator line assembly from the J 45268-115.

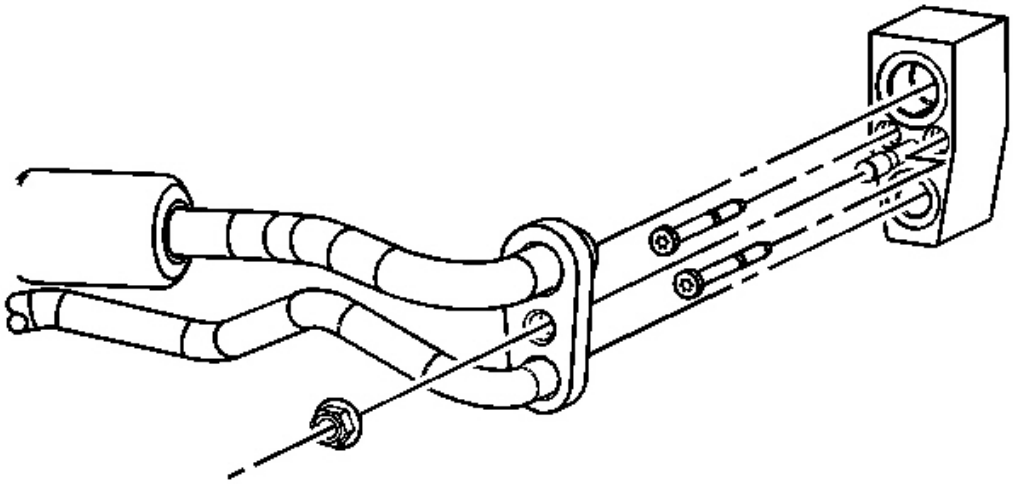

Fig. 8: J 45268-115 With TXV Components
Courtesy of GENERAL MOTORS CORP.

27. Remove the TXV bolts retaining the J 45268-115.
28. Remove the J 45268-115.
29. Inspect the TXV for debris. Clean or replace as needed.
30. Install the TXV. Refer to **Thermal Expansion Valve Replacement**.
31. Evacuate and recharge the A/C system. Refer to **Refrigerant Recovery and Recharging**.
32. Leak test the fittings using **J 42220** . See **Special Tools**.

COMPRESSOR OIL BALANCING

Draining Procedure

IMPORTANT: Drain and measure as much of the refrigerant oil as possible from the rear head ports and the front head compressor drain bolt hole of the REMOVED compressor.

1. Remove the compressor crankcase oil drain bolt and drain the refrigerant oil from the crankcase and rear head ports into a clean, graduated container.

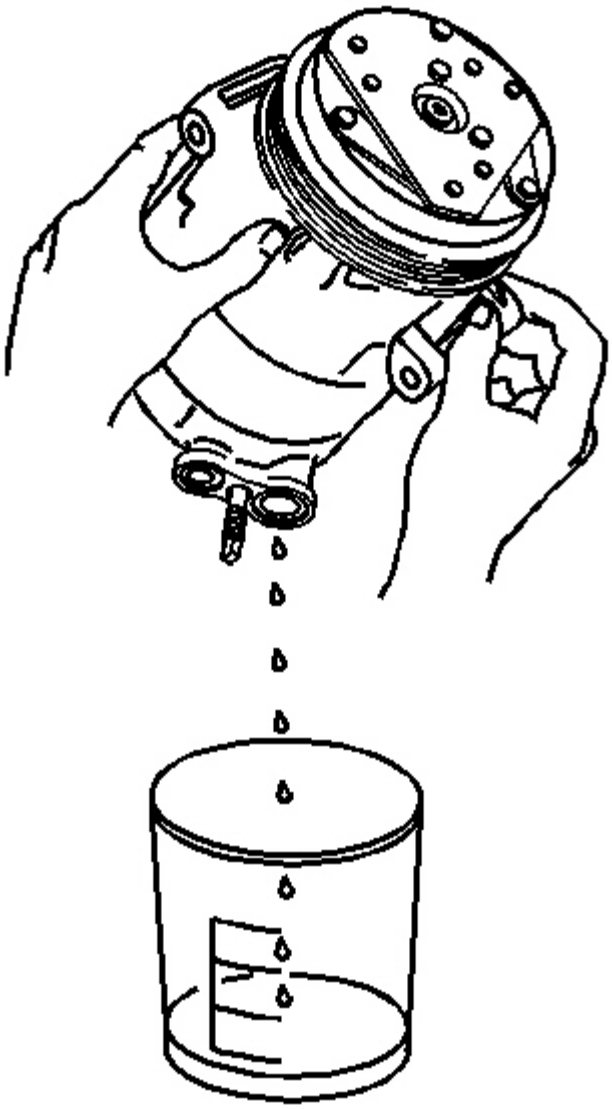

Fig. 9: Draining A/C Refrigerant Oil From Compressor
Courtesy of GENERAL MOTORS CORP.

2. Rotate the compressor shaft to assist in draining the compressor.
3. Measure and record the amount of oil drained from the removed compressor.

   This measurement will be used during installation of the replacement compressor.

4. Properly discard the used refrigerant oil.
5. Clean the graduated cylinder.

IMPORTANT: Drain and measure as much of the refrigerant oil as possible from the rear head ports and the front head compressor drain bolt hole of the NEW compressor.

6. Remove the compressor crankcase oil drain bolt and drain the refrigerant oil from the crankcase and rear head ports into a clean, graduated container.

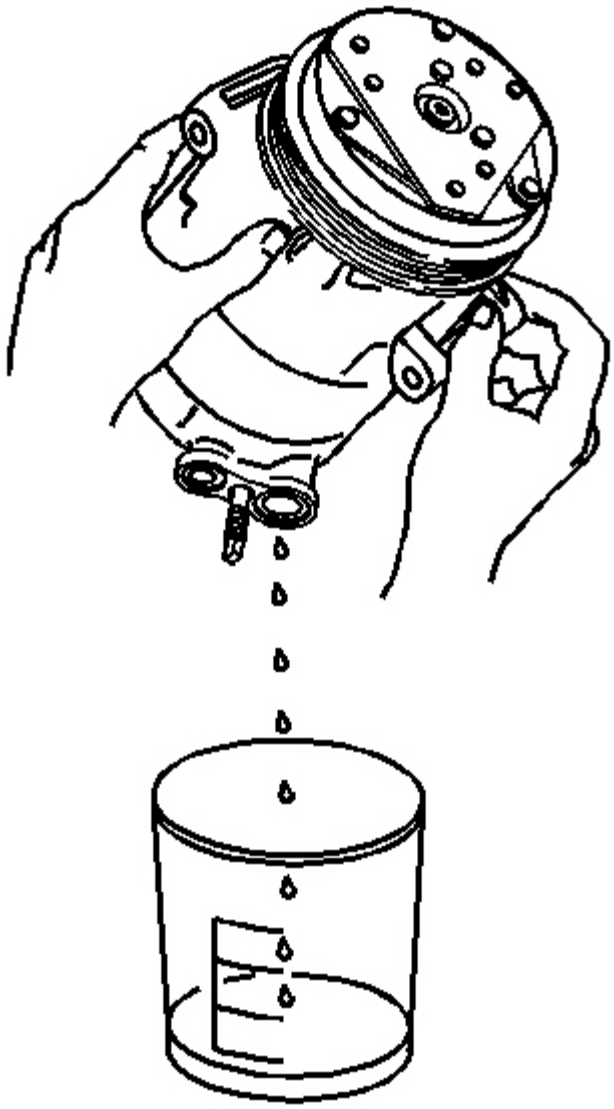

Fig. 10: Draining A/C Refrigerant Oil From Compressor
Courtesy of GENERAL MOTORS CORP.

7. Rotate the compressor shaft to assist in draining the compressor.

Balancing Procedure

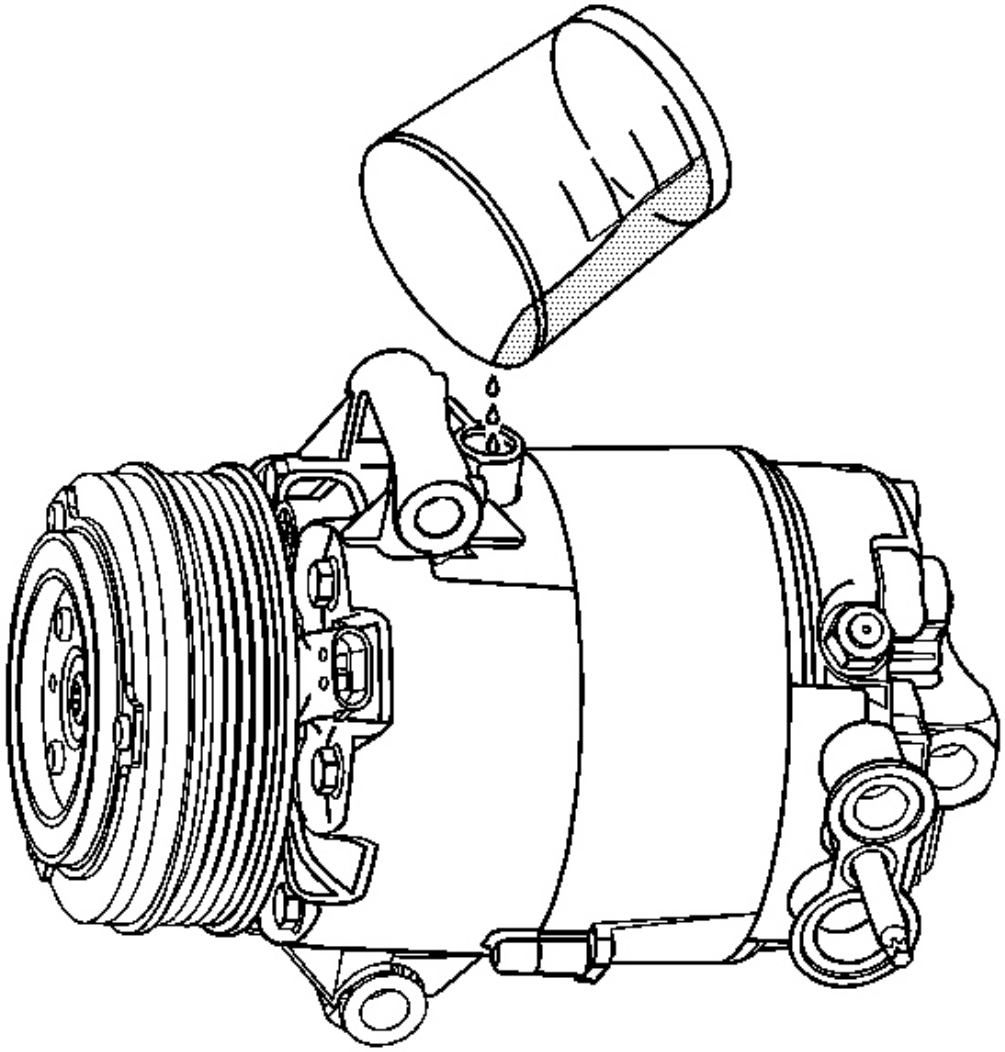

Fig. 11: Balancing Refrigerant Oil During Compressor Replacement
Courtesy of GENERAL MOTORS CORP.

IMPORTANT: The refrigerant oil in the A/C system must be balanced during compressor replacement.
The replacement compressor is shipped with the total system capacity of refrigerant oil.

1. Refer to the amount of refrigerant oil recorded during the compressor removal.
2. If the amount of oil recorded from the removed compressor is less than or equal to 75 ml (2.5 fl. oz), add 75 ml of the new PAG oil back into the new compressor through the compressor oil drain bolt hole.
3. If the amount of oil recorded from the removed compressor is greater than 75 ml (2.5 fl. oz), add the equivalent amount of the new PAG oil back into the new compressor through the compressor oil drain bolt hole.

NOTE: Refer to Fastener Notice in Cautions and Notices.

4. Install the compressor oil drain bolt.

   Tighten: Tighten the bolt to 15 N.m (11 lb ft).

5. Rotate the clutch driver three times to lubricate the internal compressor components.

IMPORTANT: If additional A/C components are replaced during compressor replacement, add the PAG oil directly to the A/C compressor to compensate the A/C system.

6. If necessary, refer to **Refrigerant System Capacities**.

COMPRESSOR REPLACEMENT

Tools Required

J 39400-A Halogen Leak Detector

Removal Procedure

IMPORTANT: The A/C compressor is removed through the RH front wheel house opening. It is necessary to lower the engine cradle assembly to allow adequate clearance during removal.

1. Recover the refrigerant from the A/C system. Refer to **Refrigerant Recovery and Recharging**.
2. Remove the A/C compressor hose assembly. Refer to **Compressor Hose Assembly Replacement**.
3. Remove the stabilizer shaft. Refer to **Stabilizer Shaft Replacement** in Front Suspension.

4. Remove the RH lower shock absorber mounting bolts. Refer to **Shock Absorber Replacement (W/F55)** in Front Suspension.
5. Separate the RH upper ball joint from the RH upper control arm. Refer to **Upper Control Arm Replacement** in Front Suspension.
6. Remove the LH wheel and tire and wheel. Refer to **Tire and Wheel Removal and Installation** in Tires and Wheels.
7. Remove the LH lower shock absorber mounting bolts. Refer to **Shock Absorber Replacement (W/F55)** in Front Suspension.

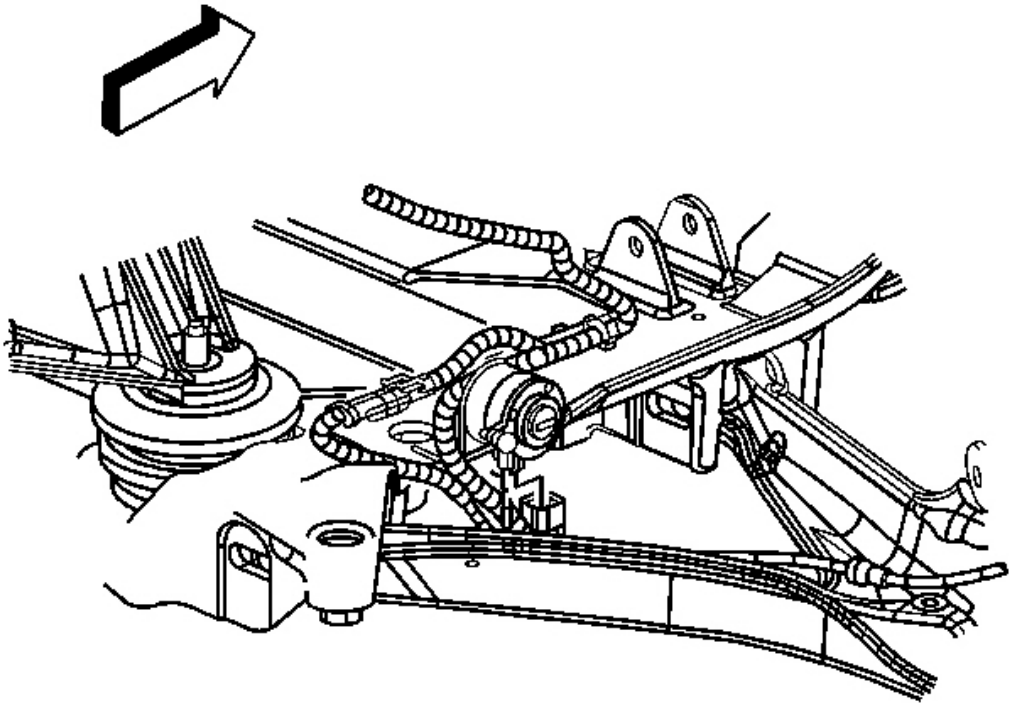

Fig. 12: View Of Road Sensing Suspension Position Sensor Links & Lower Control Arm
Courtesy of GENERAL MOTORS CORP.

8. Disconnect the RH ESC position sensor harness connector.

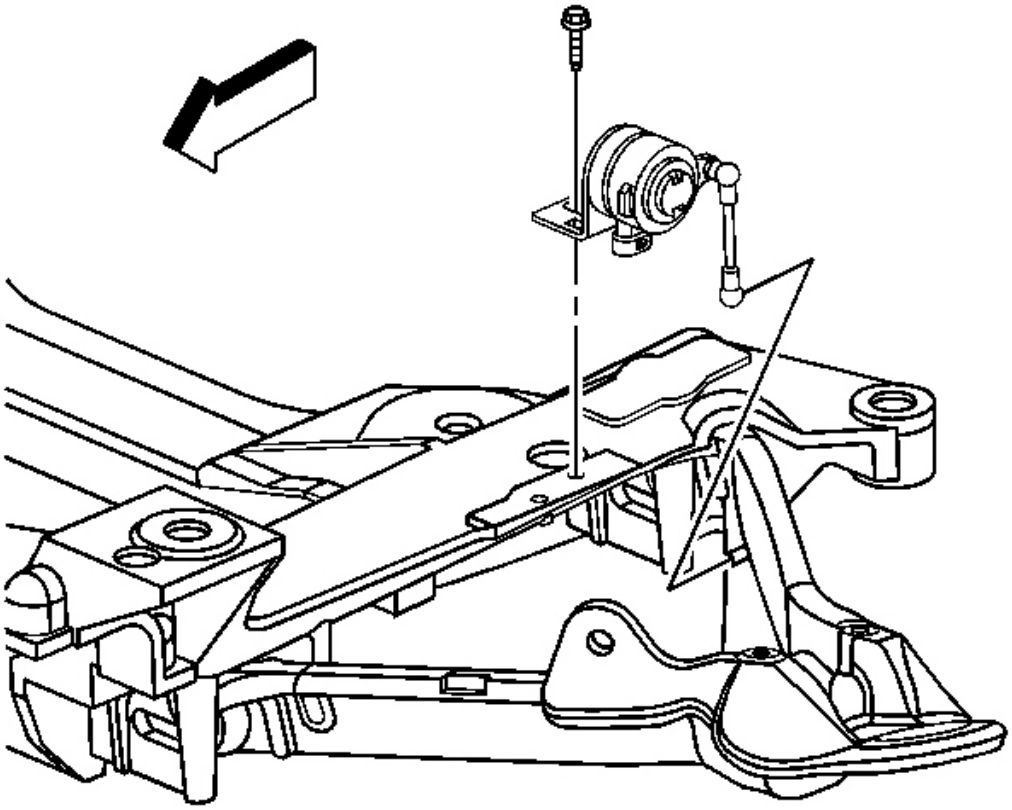

Fig. 13: RH ESC & Components
Courtesy of GENERAL MOTORS CORP.

9. Disconnect the RH ESC sensor link from the control arm link stud.
10. Remove the RH ESC position sensor mounting bolt.
11. Remove the RH ESC position sensor from the vehicle.
12. Remove the RH brake pipe to front suspension crossmember mounting bolt.

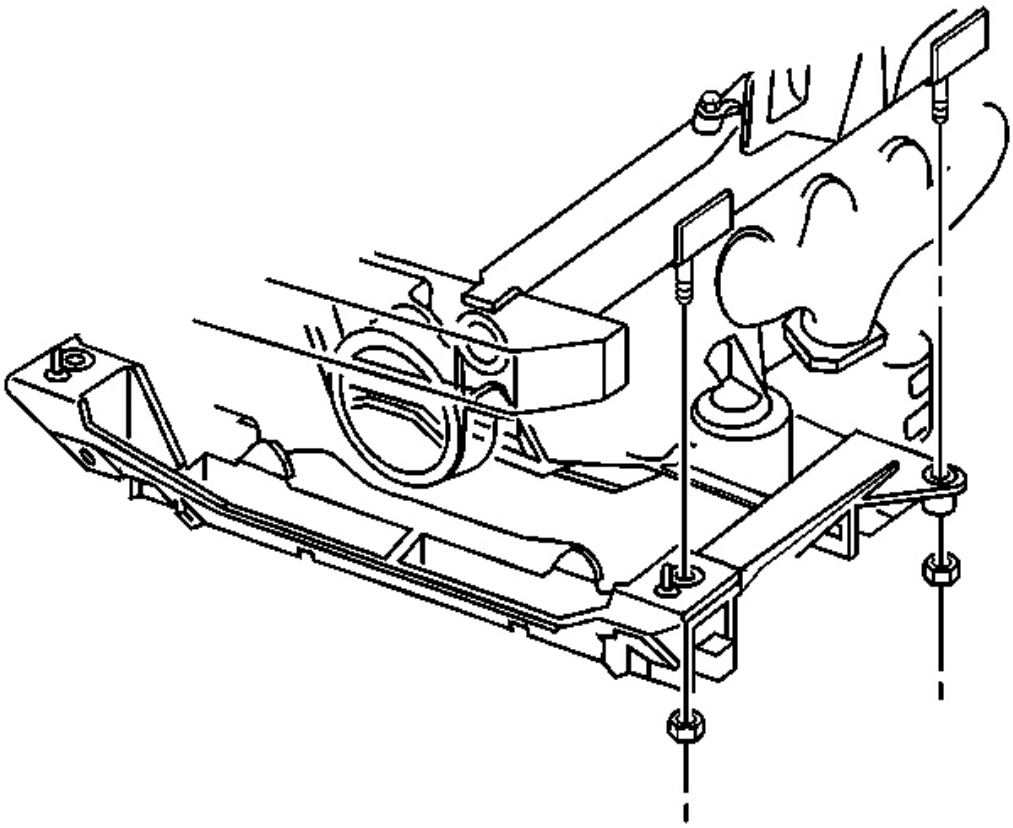

Fig. 14: View Of Front & Rear Crossmember Nuts
Courtesy of GENERAL MOTORS CORP.

13. Support the LH side of the front crossmember.
14. Support the RH side of the front crossmember with a transmission jack.
15. Remove the front crossmember mounting nuts.
16. Lower the LH side of the front crossmember approximately 0.375 in (10.0 mm).
17. Lower the RH side of the front crossmember approximately 2.00 in (51.0 mm).
18. Disconnect the A/C compressor electrical connector.

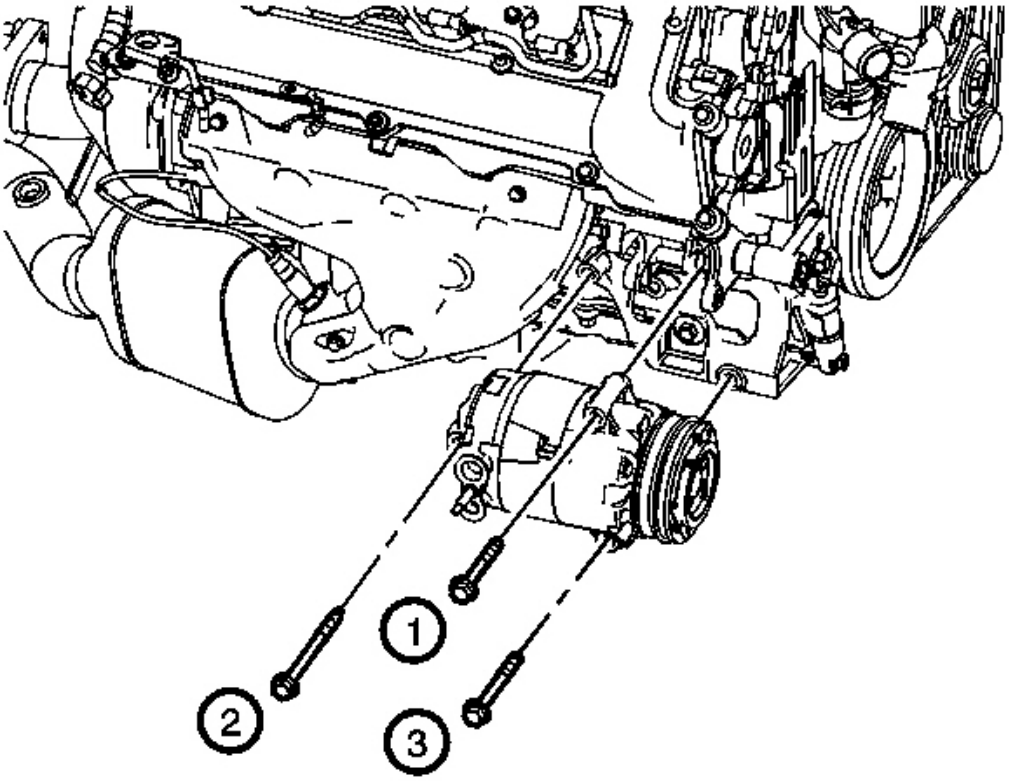

Fig. 15: Identifying A/C Mounting Bolts With A/C Compressor
Courtesy of GENERAL MOTORS CORP.

19. Remove the A/C compressor mounting bolts (1, 2, 3).
20. Remove the A/C compressor from the vehicle.

IMPORTANT: Replacement A/C compressors are charged with PAG oil. Refer to Refrigerant System Capacities.

21. If replacing the A/C compressor, balance the compressor. Refer to **Compressor Oil Balancing**.

Installation Procedure

1. Install the A/C compressor to the vehicle.

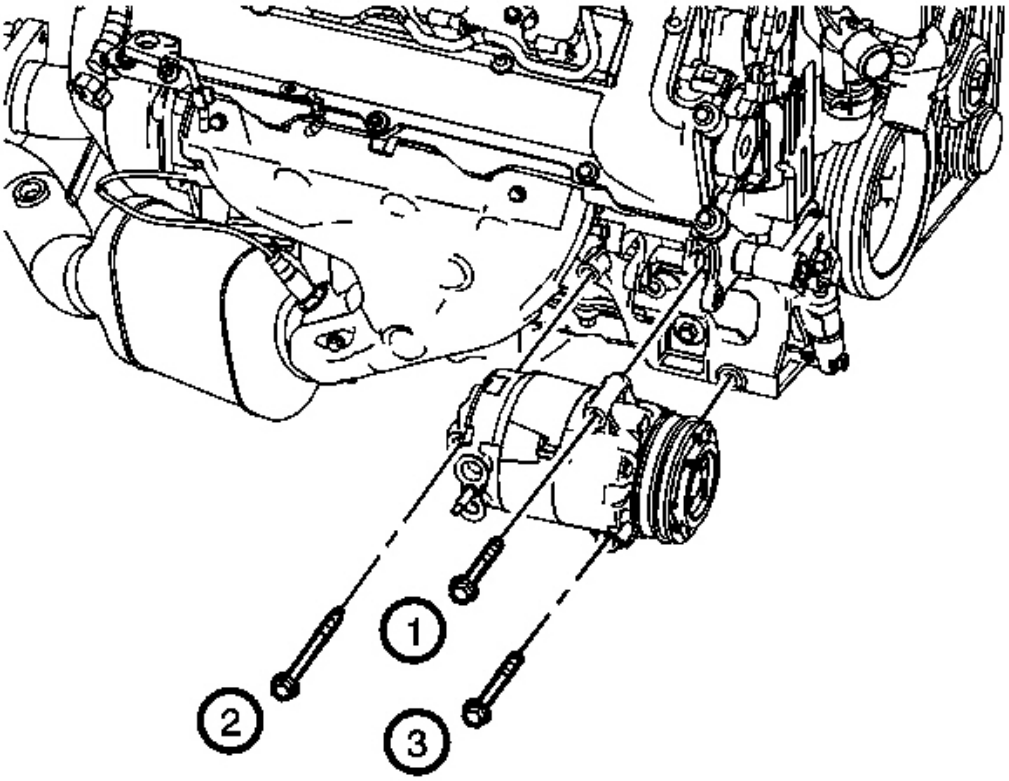

Fig. 16: Identifying A/C Mounting Bolts With A/C Compressor
Courtesy of GENERAL MOTORS CORP.

NOTE: Refer to Fastener Notice in Cautions and Notices.

IMPORTANT: Finger tighten all the A/C compressor mounting bolts.

2. Position the A/C compressor onto the A/C compressor bracket and install the A/C compressor mounting bolts (1, 2, 3) and torque in sequence.

   Tighten: Tighten the bolts to 50 N.m (37 lb ft).

3. Connect the A/C compressor electrical connector.

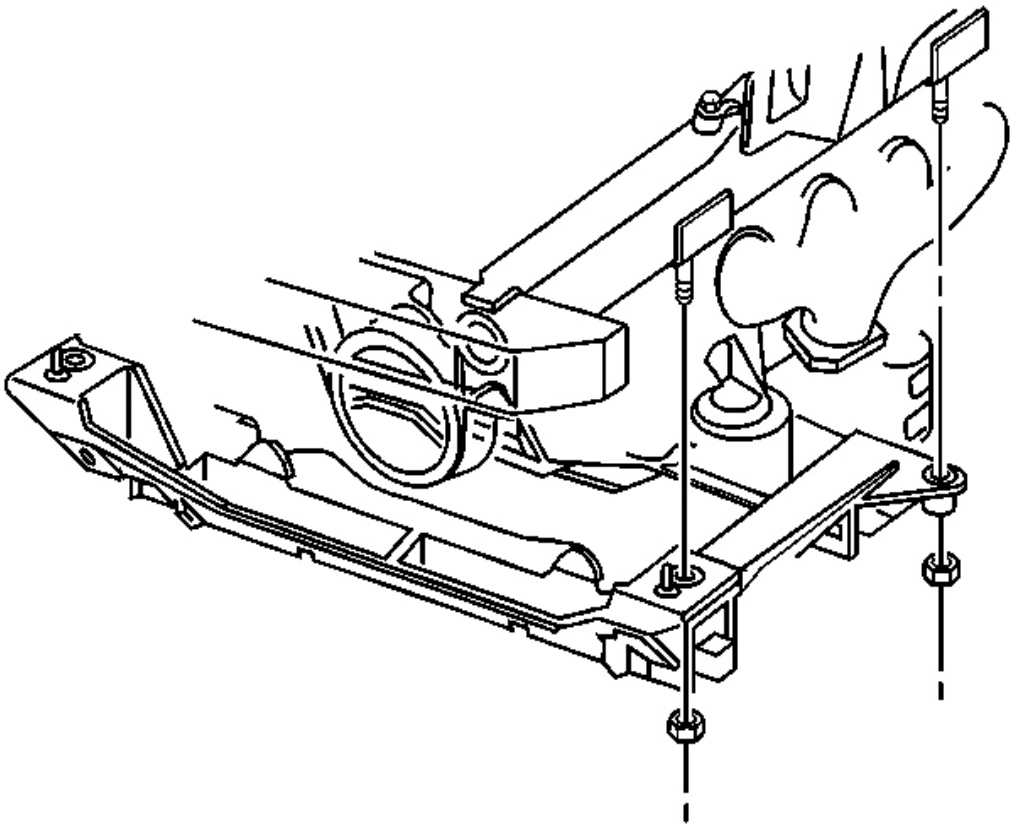

Fig. 17: View Of Front & Rear Crossmember Nuts
Courtesy of GENERAL MOTORS CORP.

4. Raise the front crossmember into the proper position.
5. Install the front crossmember mounting nuts.

   Tighten: Tighten the nuts to 110 N.m (81 lb ft).

6. Remove the transmission jack from under the vehicle
7. Install the RH brake pipe to front crossmember mounting bolt.

   Tighten: Tighten the bolt to 3 N.m (26 lb in).

8. Install the ESC position sensor to the vehicle.

9. Install the ESC position sensor mounting bolt.

   Tighten: Tighten the bolt to 3 N.m (26 lb in).

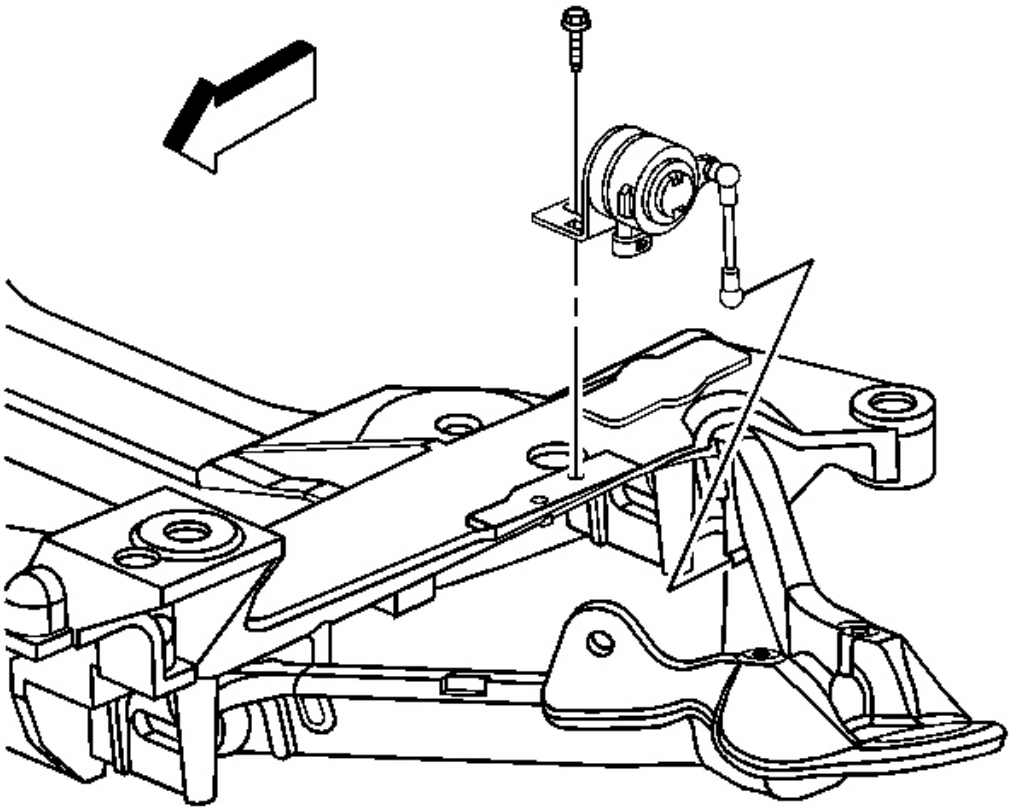

Fig. 18: RH ESC & Components
Courtesy of GENERAL MOTORS CORP.

10. Connect the ESC sensor link to the control arm link stud.

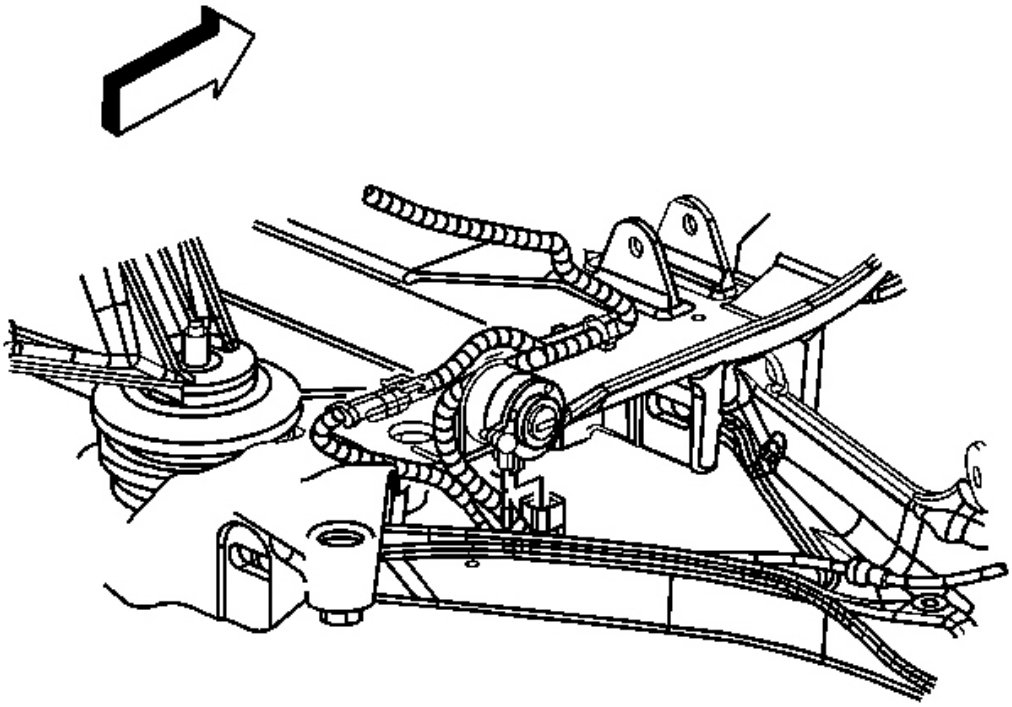

Fig. 19: View Of Road Sensing Suspension Position Sensor Links & Lower Control Arm
Courtesy of GENERAL MOTORS CORP.

11. Connect the RH ESC position sensor harness connector.
12. Install the LH lower shock absorber mounting bolts. Refer to **Shock Absorber Replacement (W/F55)** in Front Suspension.
13. Install the LH wheel and tire and wheel. Refer to **Tire and Wheel Removal and Installation** in Tires and Wheels.
14. Install the RH upper ball joint to the RH upper control arm. Refer to **Upper Control Arm Replacement** in Front Suspension.
15. Install the RH lower shock absorber mounting bolts. Refer to **Shock Absorber Replacement (W/F55)** in Front Suspension.
16. Install the stabilizer shaft. Refer to **Stabilizer Shaft Replacement** in Front Suspension.
17. Install the compressor hose assembly. Refer to **Compressor Hose Assembly Replacement**.

18. Evacuate and recharge the A/C system. Refer to **Refrigerant Recovery and Recharging**.
19. Leak test the fittings of the A/C components using **J 39400-A** .

COMPRESSOR PRESSURE RELIEF VALVE REPLACEMENT

Tools Required

J 39400-A Halogen Leak Detector

Removal Procedure

1. Recover the refrigerant. Refer to **Refrigerant Recovery and Recharging**.
2. Raise and support the vehicle. Refer to **Lifting and Jacking the Vehicle** in General Information.
3. Remove the right front wheel and tire from the vehicle. Refer to **Tire and Wheel Removal and Installation** in Tires and Wheels.

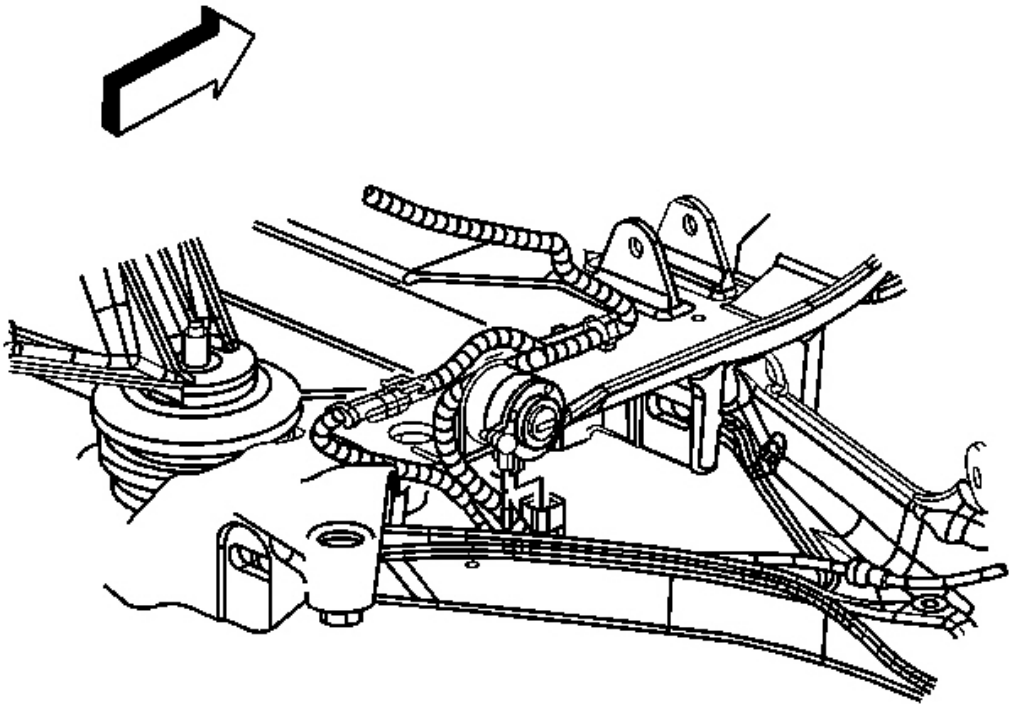

Fig. 20: View Of Road Sensing Suspension Position Sensor Links & Lower Control Arm
Courtesy of GENERAL MOTORS CORP.

4. Disconnect the RH ESC position sensor harness connector.

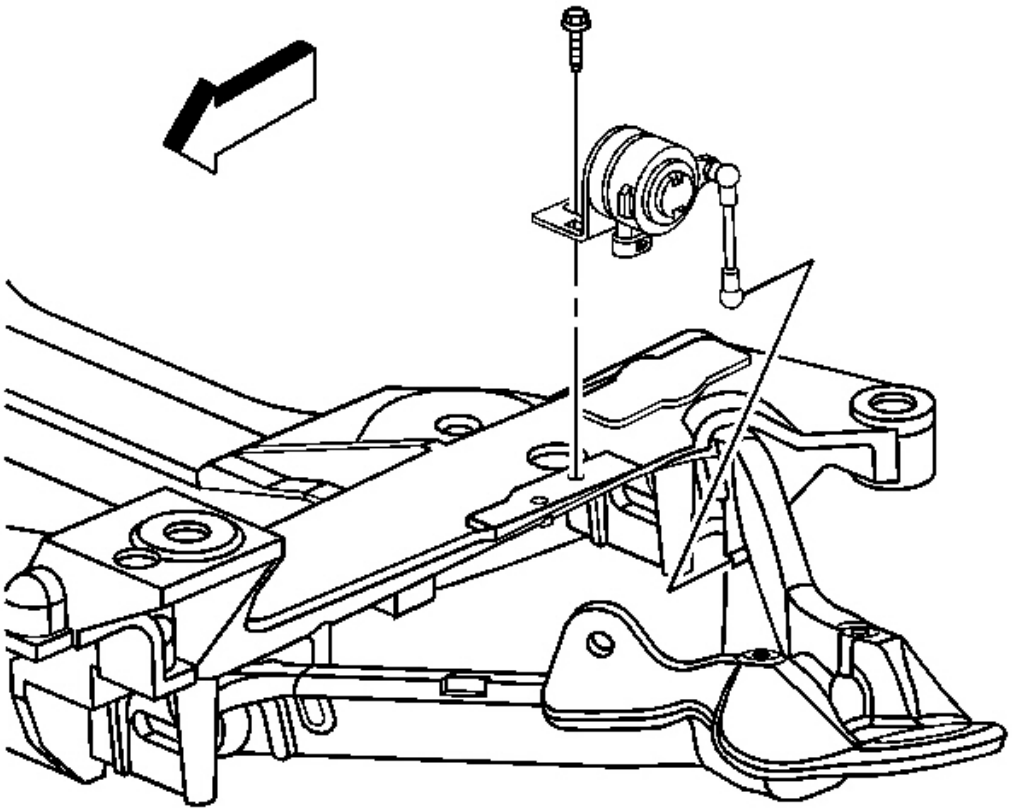

Fig. 21: RH ESC & Components
Courtesy of GENERAL MOTORS CORP.

5. Disconnect the ESC sensor link from the control arm link stud.
6. Remove the ESC position sensor mounting bolt.
7. Remove the ESC position sensor from the vehicle.
8. Disconnect the front RH ABS electrical connector from the engine cradle and reposition aside.

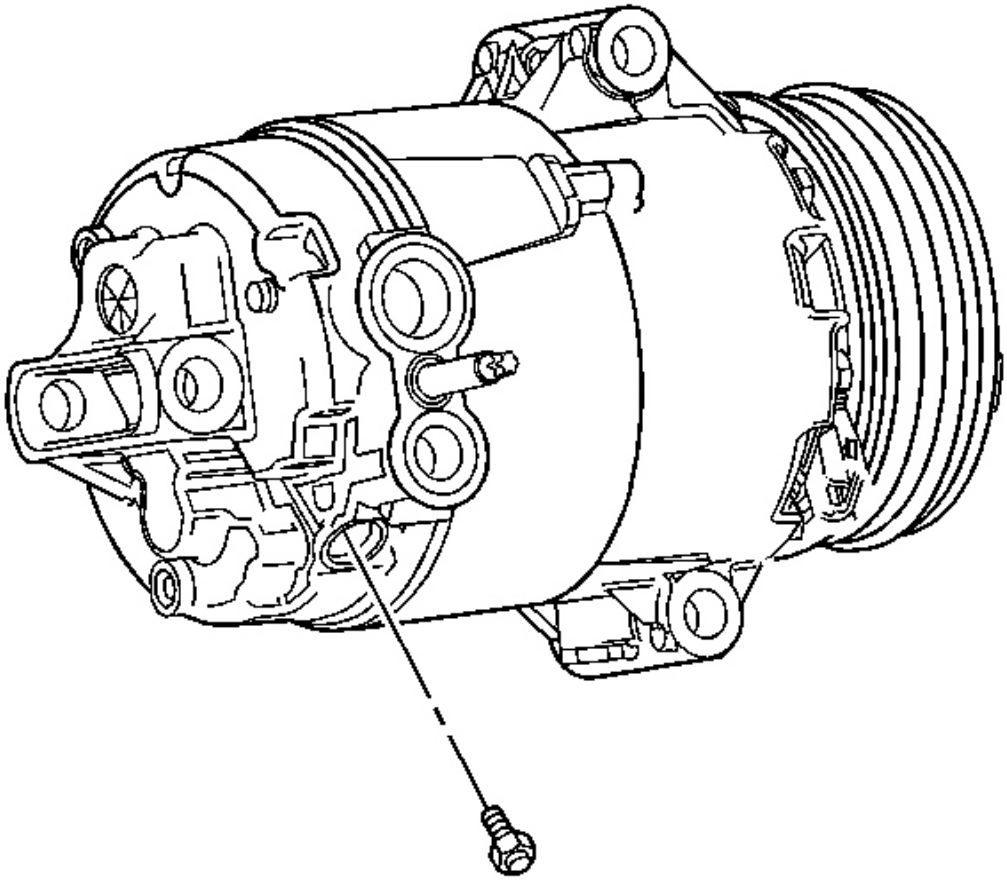

Fig. 22: A/C Compressor Identifying High Pressure Release Valve
Courtesy of GENERAL MOTORS CORP.

IMPORTANT: Cap or tape the open A/C components immediately to prevent system contamination.

9. Remove the high pressure relief valve.
10. Cap or tape the A/C compressor.

Installation Procedure

1. Remove the cap or tape from the A/C compressor.

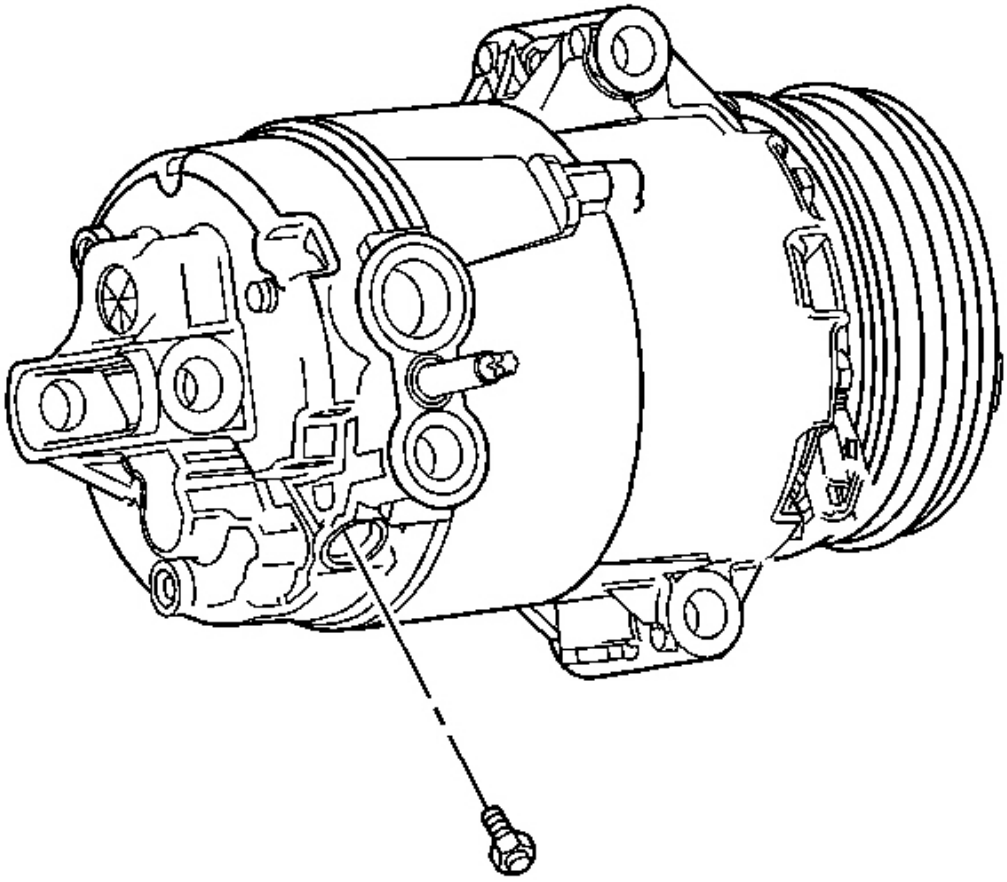

Fig. 23: A/C Compressor Identifying High Pressure Release Valve
Courtesy of GENERAL MOTORS CORP.

NOTE: Refer to Fastener Notice in Cautions and Notices.

2. Install the high pressure relief valve.

   Tighten: Tighten the valve to 8 N.m (70 lb in).

3. Connect the front RH ABS electrical connector to the engine cradle.
4. Install the ESC position sensor to the vehicle.
5. Install the ESC position sensor mounting bolt.

Tighten: Tighten the bolt to 3 N.m (26 lb in).

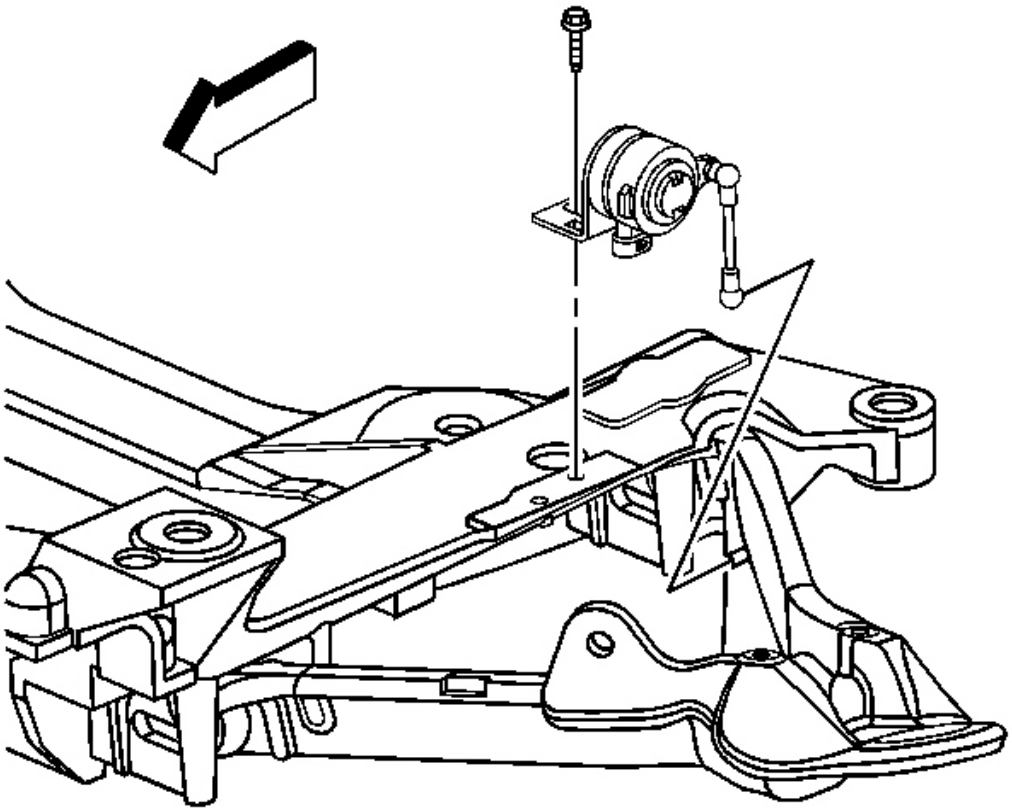

Fig. 24: RH ESC & Components
Courtesy of GENERAL MOTORS CORP.

6. Connect the ESC sensor link to the control arm link stud.

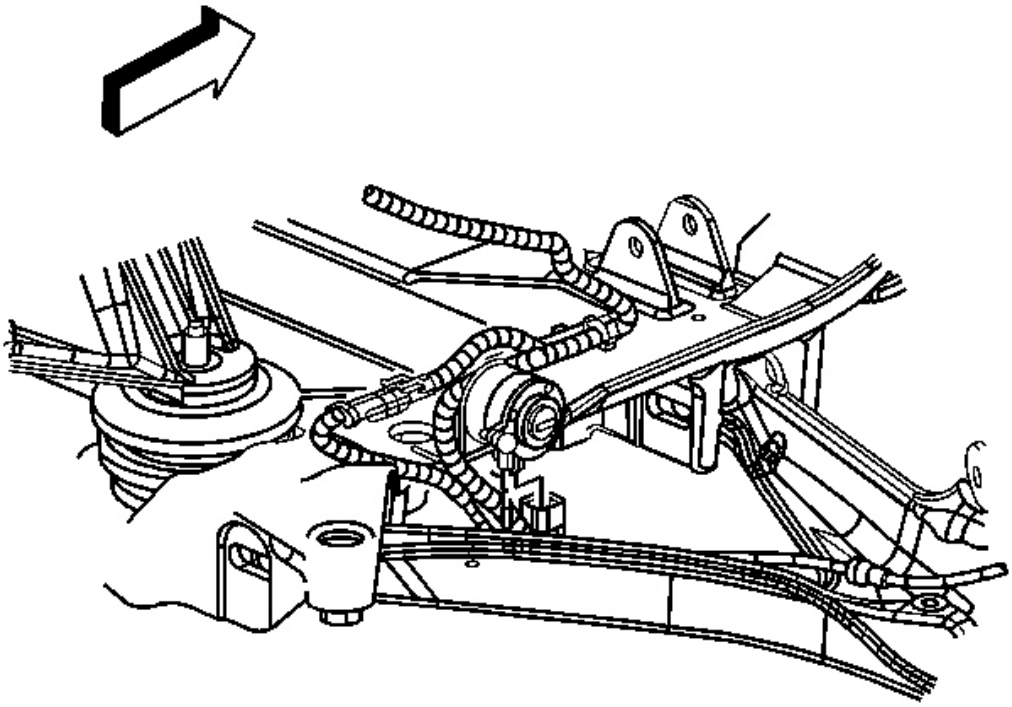

Fig. 25: View Of Road Sensing Suspension Position Sensor Links & Lower Control Arm
Courtesy of GENERAL MOTORS CORP.

7. Connect the RH ESC position sensor harness connector.
8. Install the right front wheel and tire to the vehicle. Refer to **Tire and Wheel Removal and Installation** in Tires and Wheels.
9. Lower the vehicle.
10. Evacuate and recharge the refrigerant system. Refer to **Refrigerant Recovery and Recharging**.
11. Leak test the fittings of the component using **J 39400-A** .

SEALING WASHER REPLACEMENT

Removal Procedure

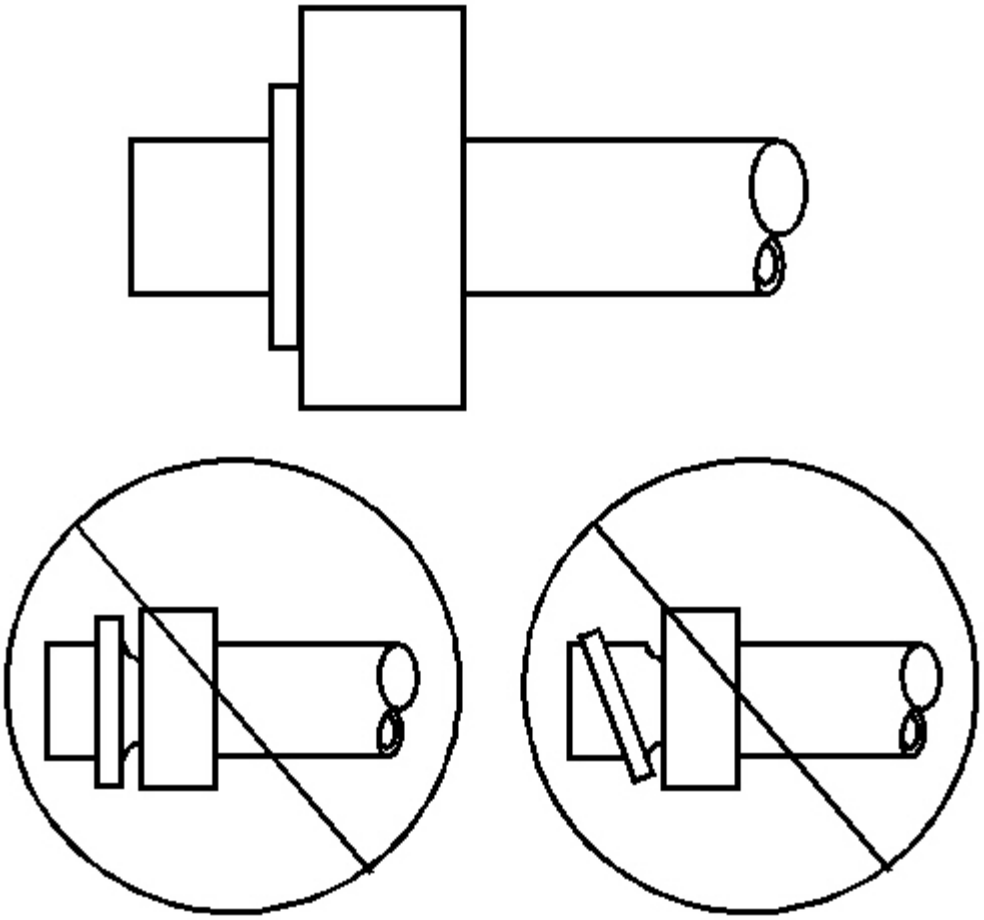

Fig. 26: Identifying Good And Bad Sealing Washer Positions
Courtesy of GENERAL MOTORS CORP.

1. Remove the seal washer from the A/C refrigerant component.
2. Inspect the seal washer for any signs of damage.
3. Inspect the A/C refrigerant components for damage or burrs. Repair or replace as necessary.

IMPORTANT: DO NOT reuse sealing washer.

4. Discard the sealing washer.

Installation Procedure

IMPORTANT: Flat washer type seals do not require lubrication.

1. Inspect the new seal washer for any signs of cracks, cuts, or damage.

   Do not use a damaged seal washer.

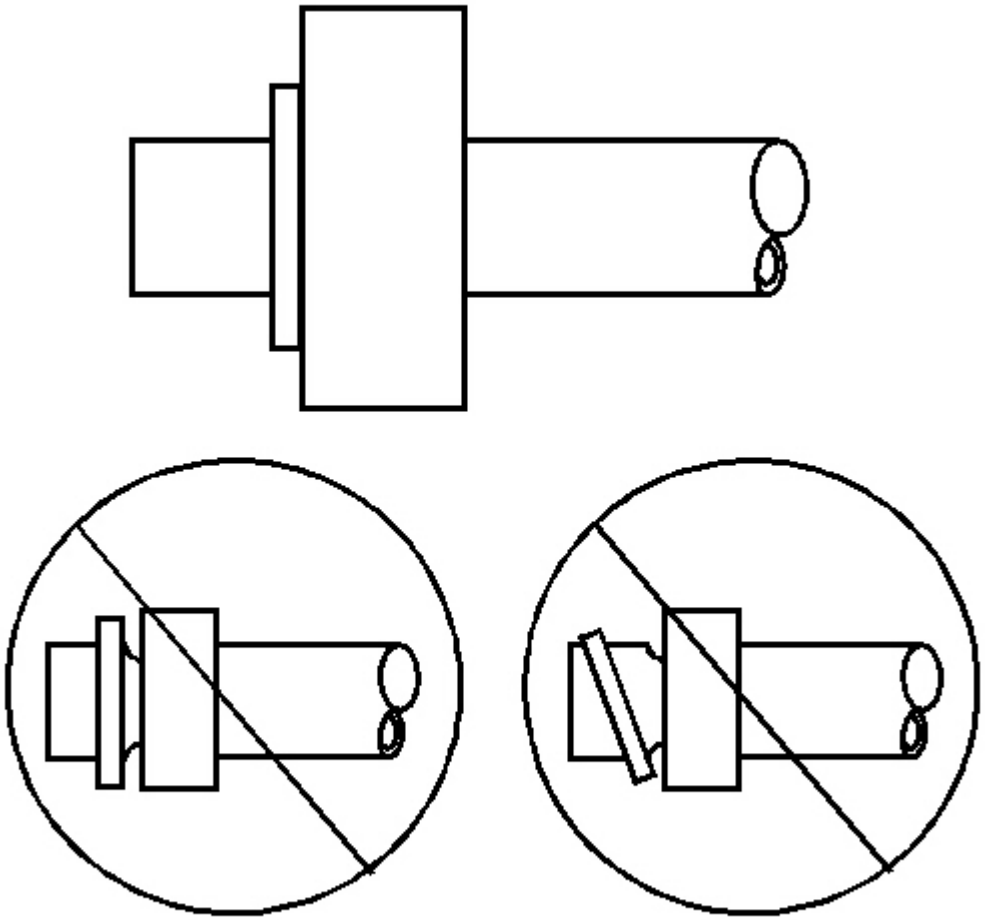

Fig. 27: Identifying Good And Bad Sealing Washer Positions
Courtesy of GENERAL MOTORS CORP.

2. Using a lint-free clean, dry cloth, clean the sealing surfaces of the A/C refrigerant

components.

3. Carefully install the new seal washer onto the A/C refrigerant component.
4. The washer must completely bottom against the surface of the fitting.

IMPORTANT: After tightening the A/C components, there should be a slight sealing washer gap of approximately 1.2 mm (3/64 in) between the A/C line and the A/C component.

5. Assemble the remaining A/C refrigerant components. Refer to the appropriate repair procedure.

O-RING REPLACEMENT

Removal Procedure

1. Disassemble the A/C refrigerant components. Refer to the appropriate repair procedure.

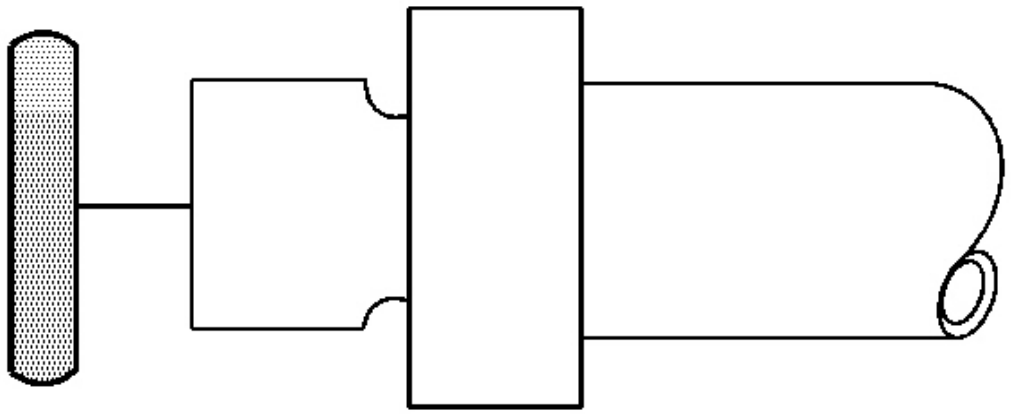

Fig. 28: O-Ring Seal & A/C Refrigerant Component
Courtesy of GENERAL MOTORS CORP.

2. Remove the O-ring seal from the A/C refrigerant component.
3. Inspect the O-ring seal for signs of damage.
4. Inspect the A/C refrigerant components for damage or burrs. Repair or replace as necessary.
5. Discard the O-ring seal.

Installation Procedure

1. Inspect the new O-ring seal for any sign or cracks, cuts, or damage. Replace if necessary.
2. Using a lint-free clean, dry cloth, carefully clean the sealing surfaces of the A/C refrigerant components.

   IMPORTANT: DO NOT allow any of the mineral base 525 viscosity refrigerant oil on the new O-ring seal to enter the refrigerant system.

3. Lightly coat the new O-ring seal and thread fitting with mineral base 525 viscosity refrigerant oil.

   IMPORTANT: DO NOT reuse O-ring seals.

4. Carefully slide the new O-ring seal onto the A/C refrigerant component.

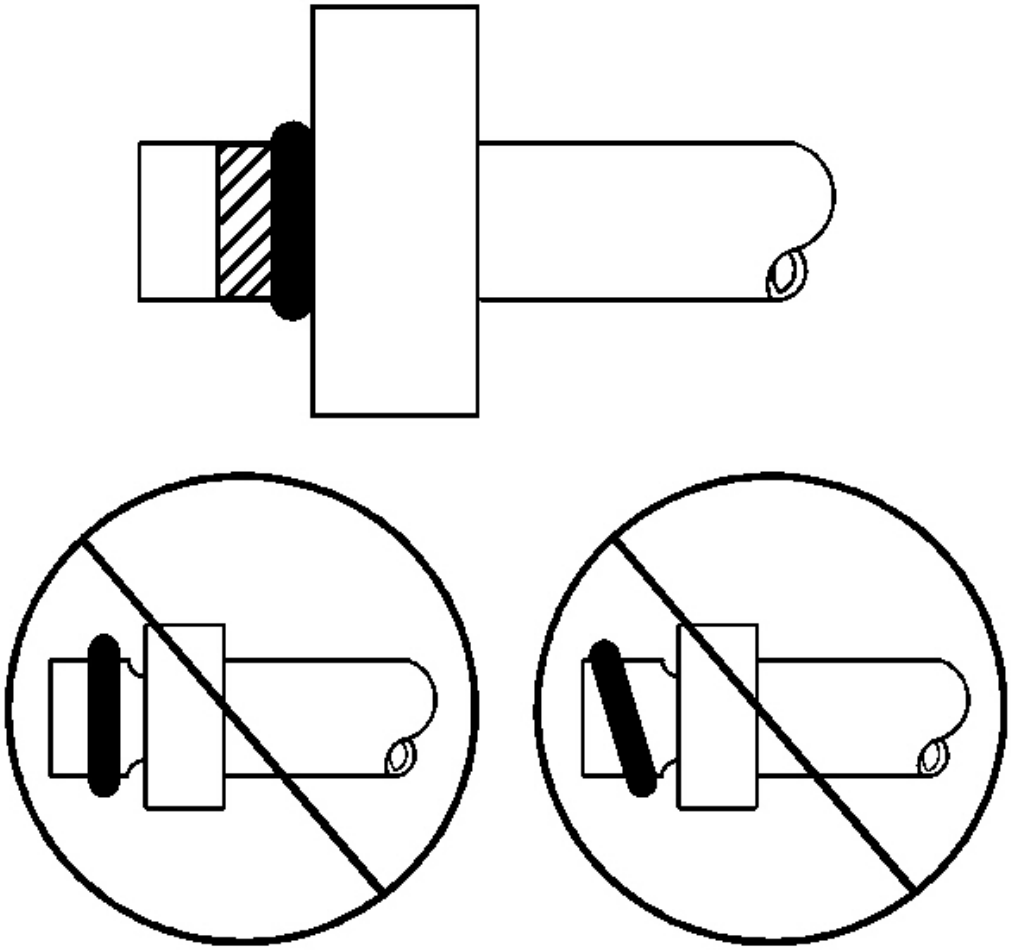

Fig. 29: Identifying Proper Seating Of A/C Refrigerant O-Ring
Courtesy of GENERAL MOTORS CORP.

5. The O-ring seal must be fully seated.
6. Assemble the A/C components.

   Refer to the appropriate repair procedure.

A/C LINE/TUBE CONNECTOR REMOVAL/REPLACEMENT

Tools Required

J 39400-A Halogen Leak Detector

Removal Procedure

1. Recover the refrigerant from the A/C system. Refer to **Refrigerant Recovery and Recharging**.

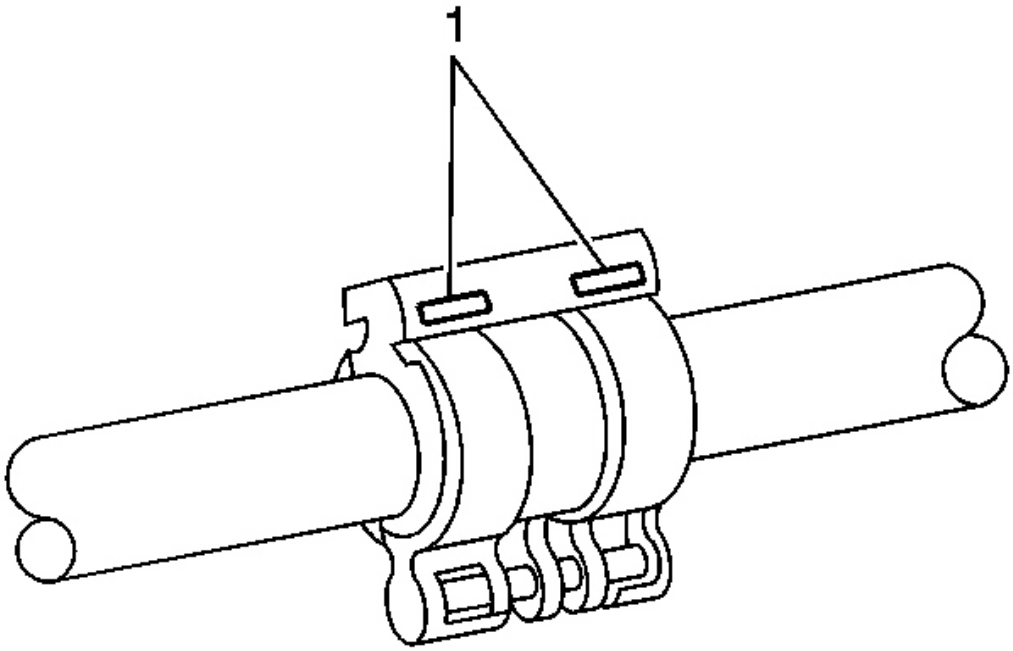

Fig. 30: A/C Coupling Assembly Locking Tab Access Slots
Courtesy of GENERAL MOTORS CORP.

2. Locate the A/C coupling assembly's locking tab access slots (1).

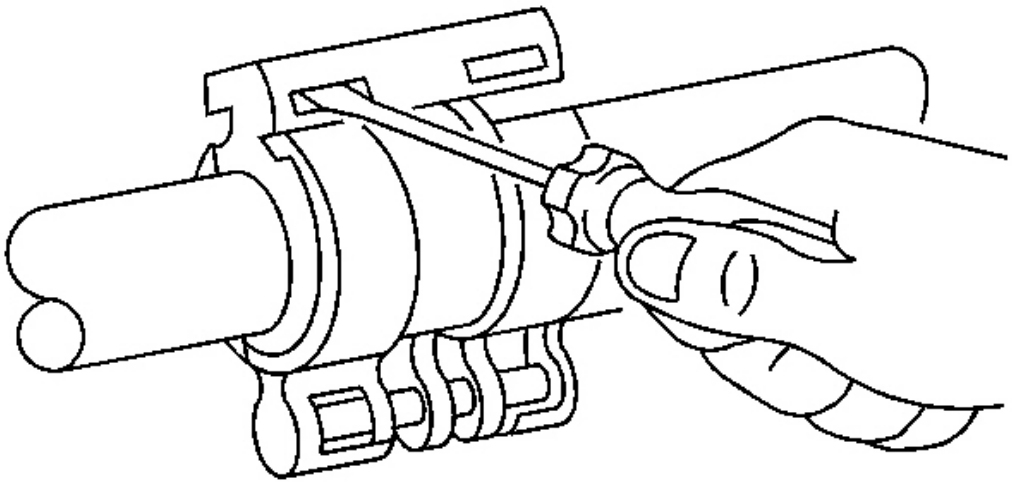

Fig. 31: Releasing First Locking Tab
Courtesy of GENERAL MOTORS CORP.

IMPORTANT: When separating the A/C coupling assembly, apply light pressure between the two halves of the coupling to prevent the locking tabs from reengaging.

3. Carefully insert a small flat bladed screwdriver into the first locking tab access slot and gently lift the locking tab to release the lock.

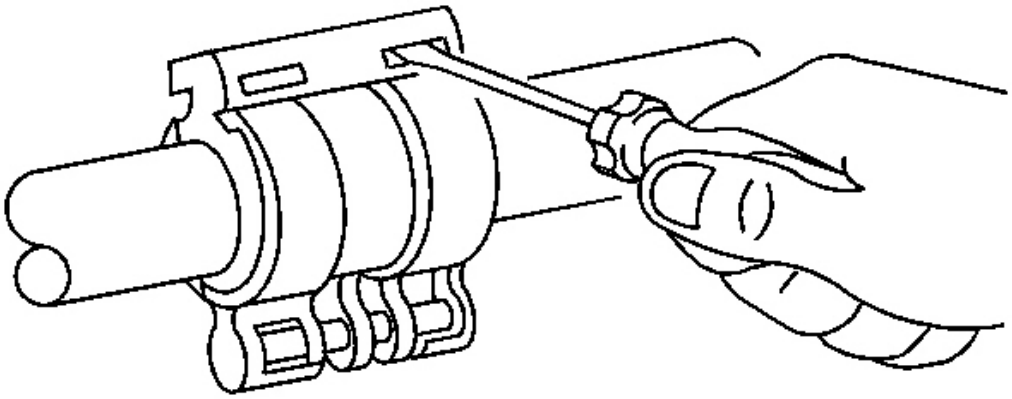

Fig. 32: Releasing Second Locking Tab
Courtesy of GENERAL MOTORS CORP.

4. Carefully insert a small flat bladed screwdriver into the second locking tab access slot and gently lift the locking tab to release the lock.

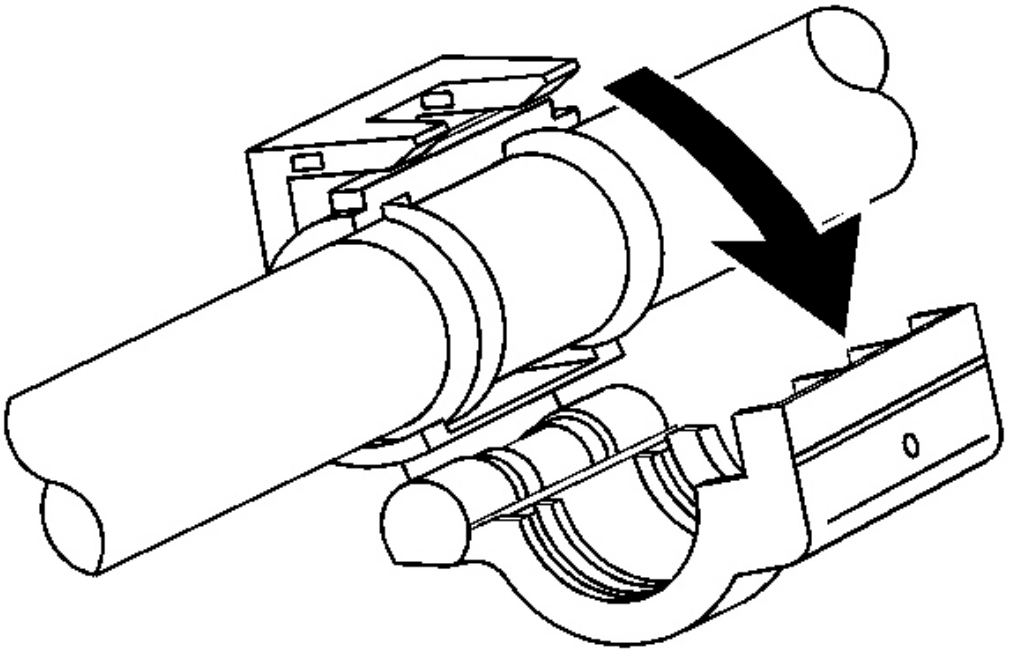

Fig. 33: Removing A/C Coupling Assembly
Courtesy of GENERAL MOTORS CORP.

5. Open and remove the A/C coupling assembly from the A/C refrigerant component.

Installation Procedure

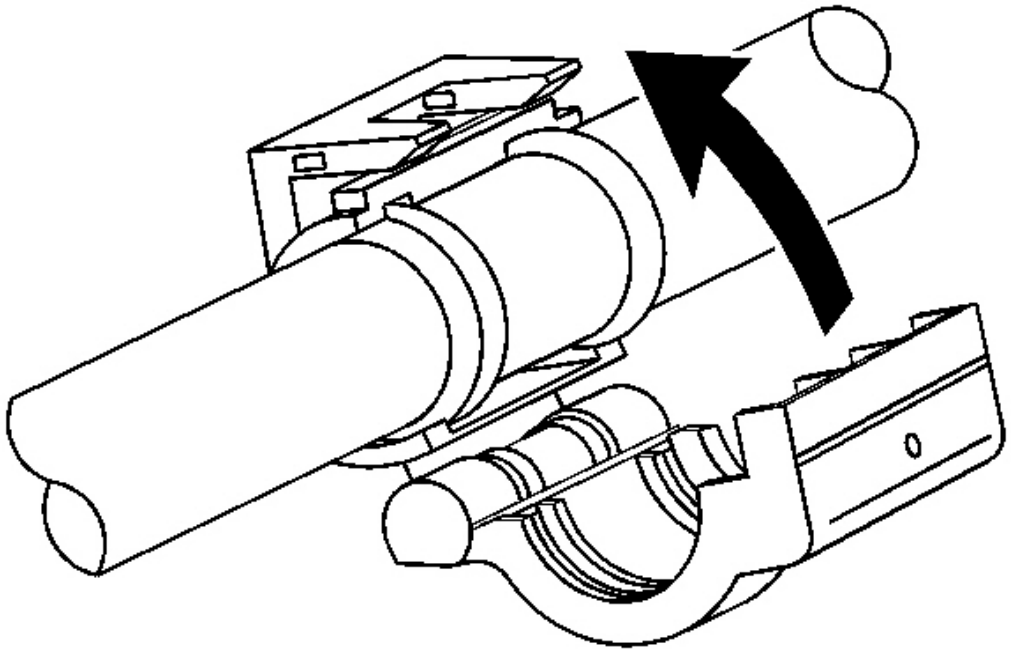

Fig. 34: Installing A/C Coupling Assembly
Courtesy of GENERAL MOTORS CORP.

IMPORTANT: Inspect the A/C coupling assembly locking tabs for damage or wear. Replace the A/C coupler assembly if any conditions exist.

1. Install the A/C coupling assembly to the A/C refrigerant component.

IMPORTANT: Ensure that the A/C coupling assembly is latched securely to the A/C refrigerant component.

2. Close the A/C coupling assembly.
3. Evacuate and recharge the A/C system. Refer to **Refrigerant Recovery and Recharging**.
4. Leak test the fittings of the component using **J 39400-A** .

COMPRESSOR HOSE ASSEMBLY REPLACEMENT

Tools Required

J 39400-A Halogen Leak Detector

Removal Procedure

1. Recover the refrigerant from the A/C system. Refer to **Refrigerant Recovery and Recharging**.
2. Remove the radiator support. Refer to **Radiator Support Replacement** in Engine Cooling.

IMPORTANT: Prior to removal, take note of the A/C compressor hose assembly routing and orientation between the compressor and condenser.
Cap or tape off the open A/C components immediately to prevent system contamination.

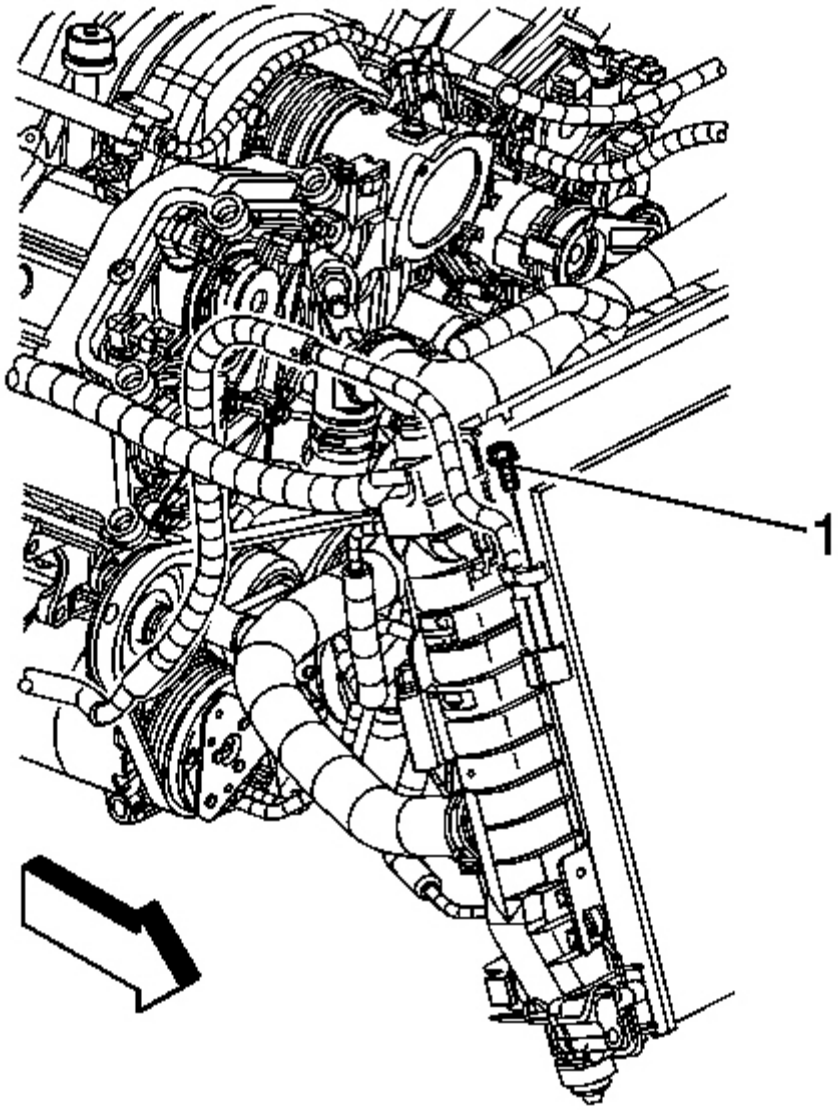

Fig. 35: Identifying A/C Compressor Hose Assembly Bolt & A/C Condenser Fitting
Courtesy of GENERAL MOTORS CORP.

3. Remove the A/C compressor hose assembly bolt (1) from the A/C condenser fitting.
4. Disconnect the A/C compressor hose assembly from the A/C condenser fitting.
5. Remove and discard the sealing washer.

6. Cap or tape off the A/C condenser fitting.

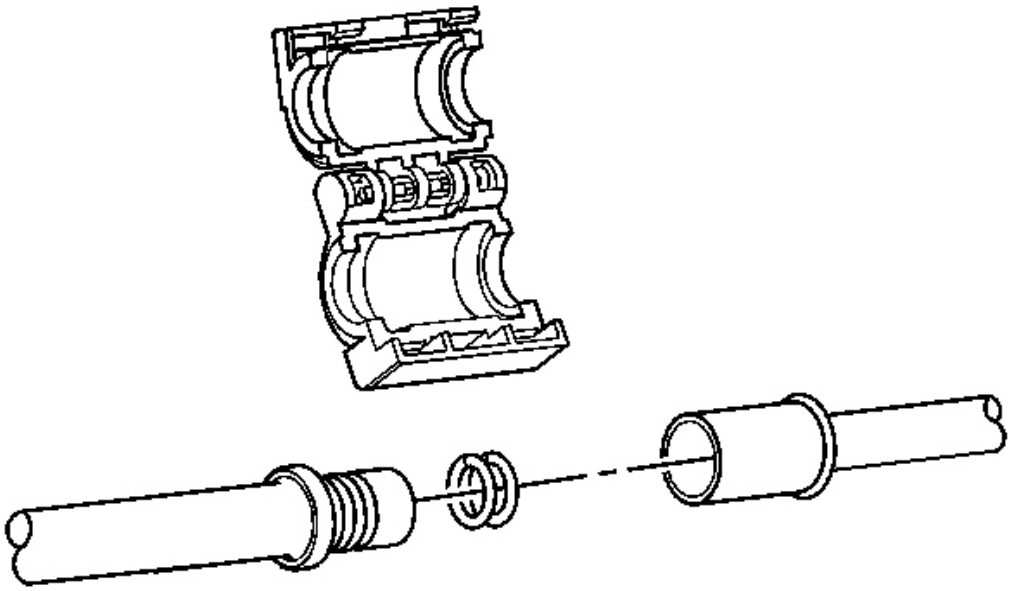

Fig. 36: A/C Tube Connector & Components
Courtesy of GENERAL MOTORS CORP.

7. Disconnect and remove the A/C tube connector from the evaporator outlet tube and A/C compressor hose assembly. Refer to **A/C Line/Tube Connector Removal/Replacement**.
8. Disconnect the evaporator outlet tube (1) from the A/C compressor hose assembly (2).
9. Cap or tape off the evaporator outlet tube (1).
10. Raise and support the vehicle. Refer to **Lifting and Jacking the Vehicle** in General Information.
11. Remove the right front tire and wheel assembly from the vehicle. Refer to **Tire and Wheel Removal and Installation** in Tires and Wheels.
12. Remove the A/C compressor hose assembly to A/C compressor retaining nut (3).

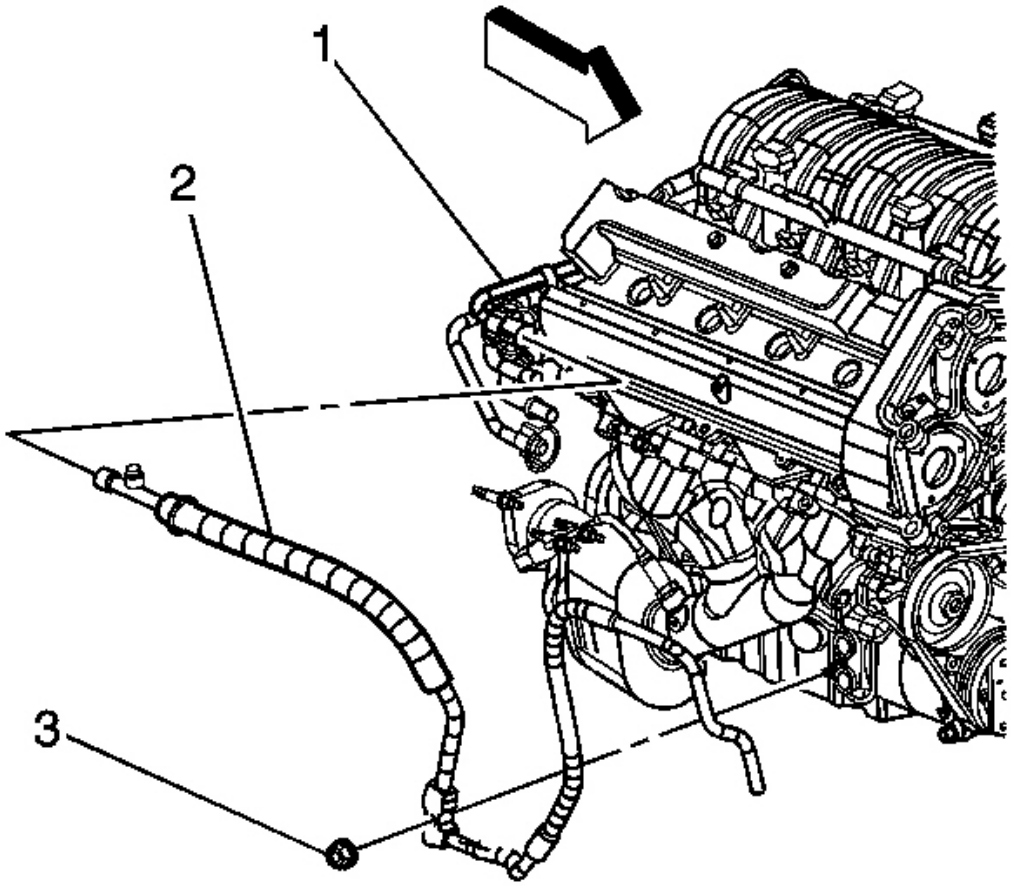

Fig. 37: A/C Compressor Hose Assembly & Components
Courtesy of GENERAL MOTORS CORP.

13. Disconnect the A/C compressor hose assembly (2) from the A/C compressor.
14. Remove and discard the sealing washers.
15. Cap or tape off the A/C compressor.
16. Remove the power steering pump. Refer to **Power Steering Pump Replacement** in Power Steering System.
17. Lower the vehicle.
18. Remove the A/C compressor hose assembly (2) from the vehicle.

Installation Procedure

1. Install the A/C compressor hose assembly (2) to the vehicle.
2. Install the power steering pump. Refer to **Power Steering Pump Replacement** in Power Steering System.
3. Raise and support the vehicle.

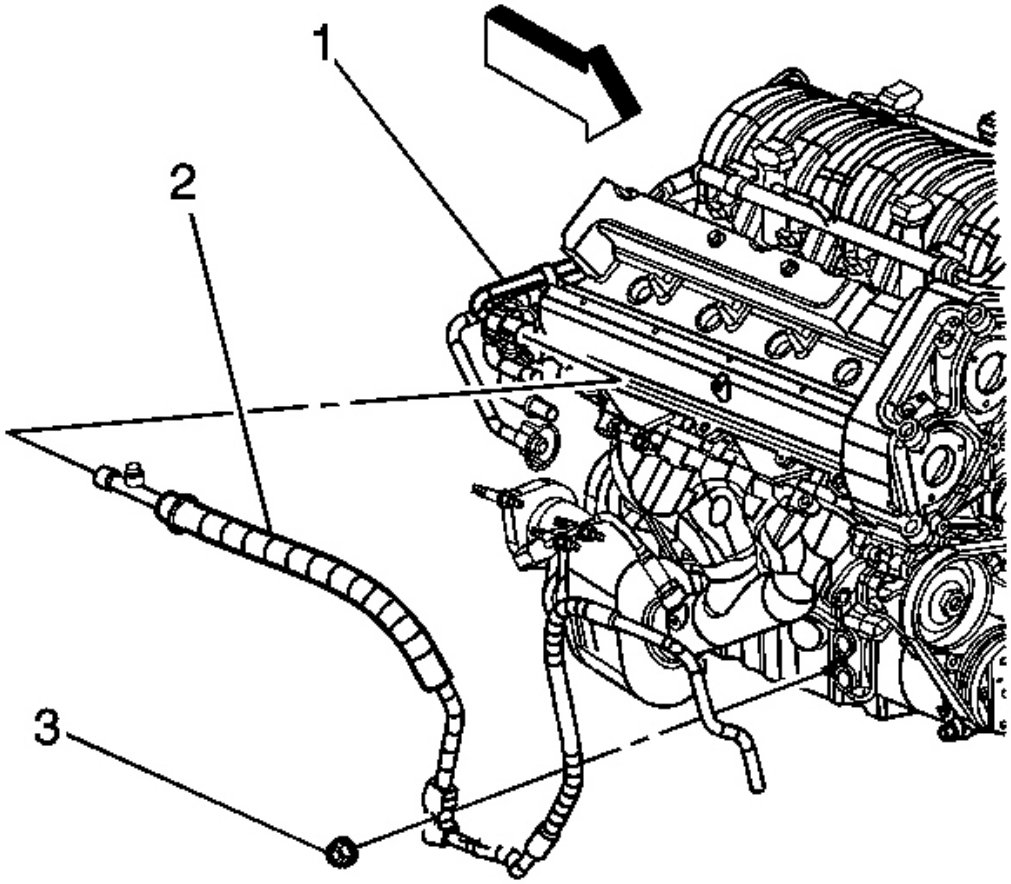

Fig. 38: A/C Compressor Hose Assembly & Components
Courtesy of GENERAL MOTORS CORP.

4. Remove cap or tape from the A/C compressor.
5. Install new sealing washers onto the compressor hose assembly. Refer to **Sealing Washer Replacement**.
6. Connect the A/C compressor hose assembly (2) to the A/C compressor.

NOTE: Refer to Fastener Notice in Cautions and Notices.

7. Install the A/C compressor hose assembly to A/C compressor retaining nut (3).

   Tighten: Tighten the nut to 20 N.m (15 lb ft).

8. Install the right front tire and wheel assembly to the vehicle. Refer to **Tire and Wheel Removal and Installation** in Tires and Wheels.
9. Lower the vehicle.
10. Remove cap or tape from the evaporator outlet tube (1).
11. Install a new O-rings onto the evaporator outlet tube (1). Refer to **O-Ring Replacement**.
12. Connect the evaporator outlet tube (1) to the A/C compressor hose assembly (2).

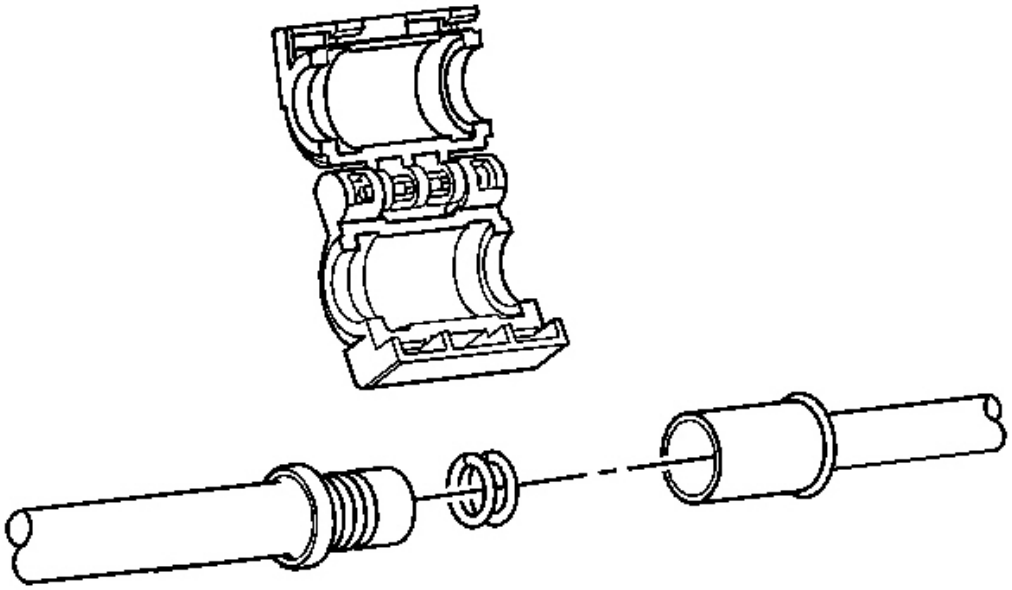

Fig. 39: A/C Tube Connector & Components
Courtesy of GENERAL MOTORS CORP.

13. Install the A/C tube connector to the evaporator outlet tube and A/C compressor hose assembly. Refer to **A/C Line/Tube Connector Removal/Replacement**.
14. Remove cap or tape from the A/C condenser fitting.

15. Install a new sealing washer onto the compressor hose assembly. Refer to **Sealing Washer Replacement**.
16. Connect the A/C compressor hose assembly to the A/C condenser fitting.

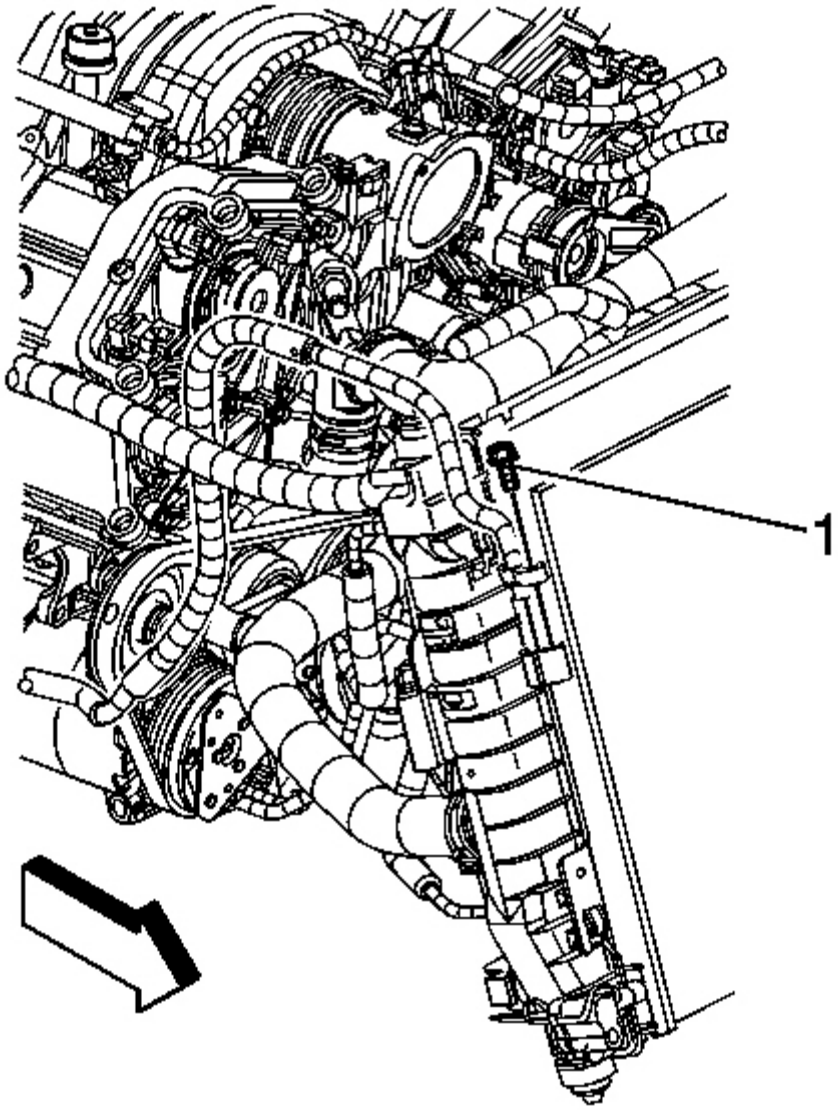

Fig. 40: Identifying A/C Compressor Hose Assembly Bolt & A/C Condenser Fitting
Courtesy of GENERAL MOTORS CORP.

17. Install the A/C compressor hose assembly bolt (1) to the A/C condenser fitting.

    Tighten: Tighten the bolt to 16 N.m (12 lb ft).

18. Install the radiator support. Refer to **Radiator Support Replacement** in Engine Cooling.
19. Recharge the A/C system. Refer to **Refrigerant Recovery and Recharging**.
20. Leak test the fittings of the component using **J 39400-A** .

EVAPORATOR TUBE REPLACEMENT - FRONT

Tools Required

J 39400-A Halogen Leak Detector

Removal Procedure

1. Recover the refrigerant from the A/C system. Refer to **Refrigerant Recovery and Recharging**.
2. Remove the battery. Refer to **Battery Replacement** in Engine Electrical.

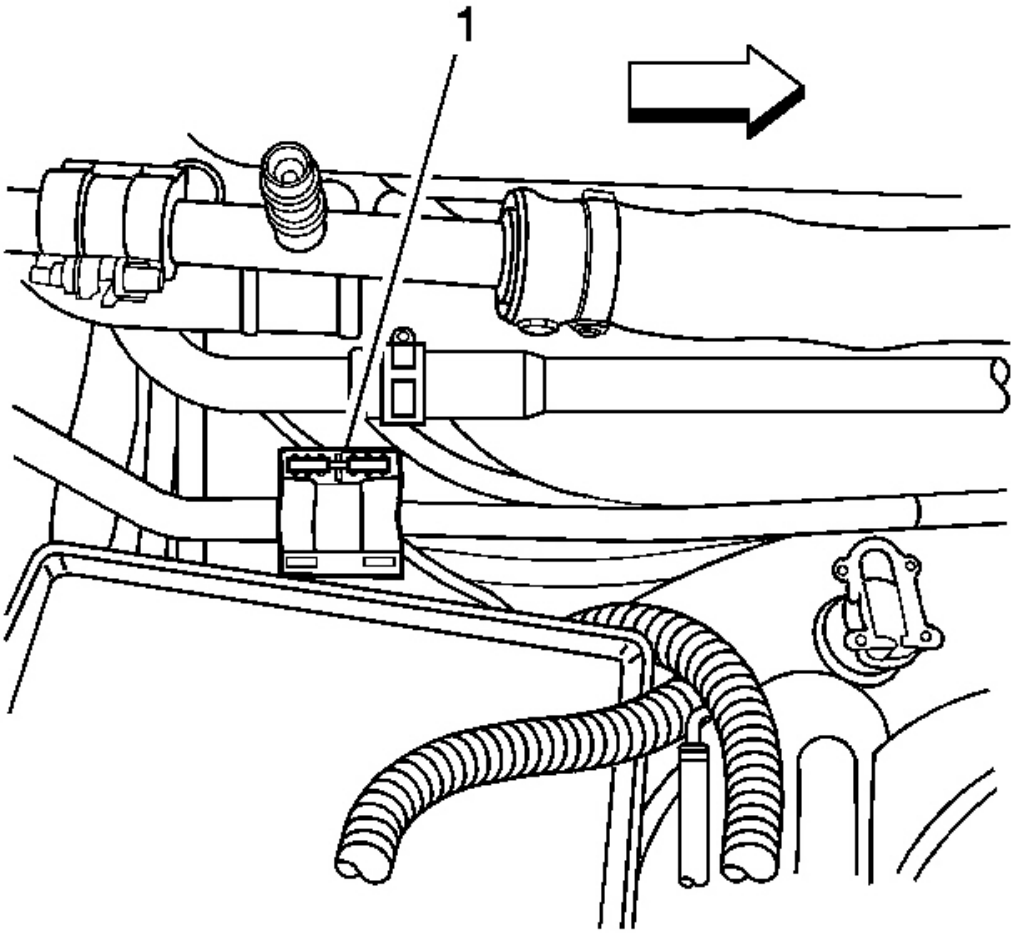

Fig. 41: A/C Tube Connector At Evaporator Rear Line Assembly
Courtesy of GENERAL MOTORS CORP.

3. Disconnect and remove the A/C tube connector (1) at the evaporator rear line assembly. Refer to **A/C Line/Tube Connector Removal/Replacement**.

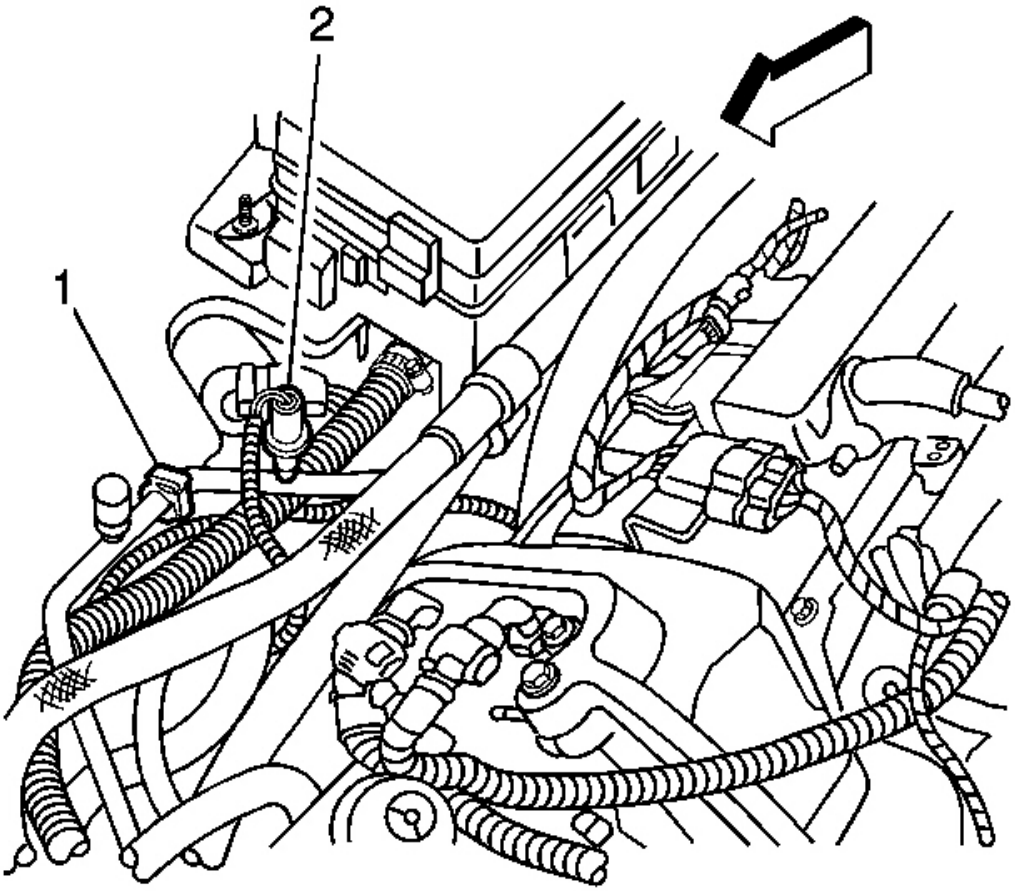

Fig. 42: Identifying Body Retaining Clip & Refrigerant Pressure Sensor Electrical Connector
Courtesy of GENERAL MOTORS CORP.

4. Disconnect the front evaporator inlet line from the body retaining clip (1).
5. Disconnect the refrigerant pressure sensor electrical connector (2).

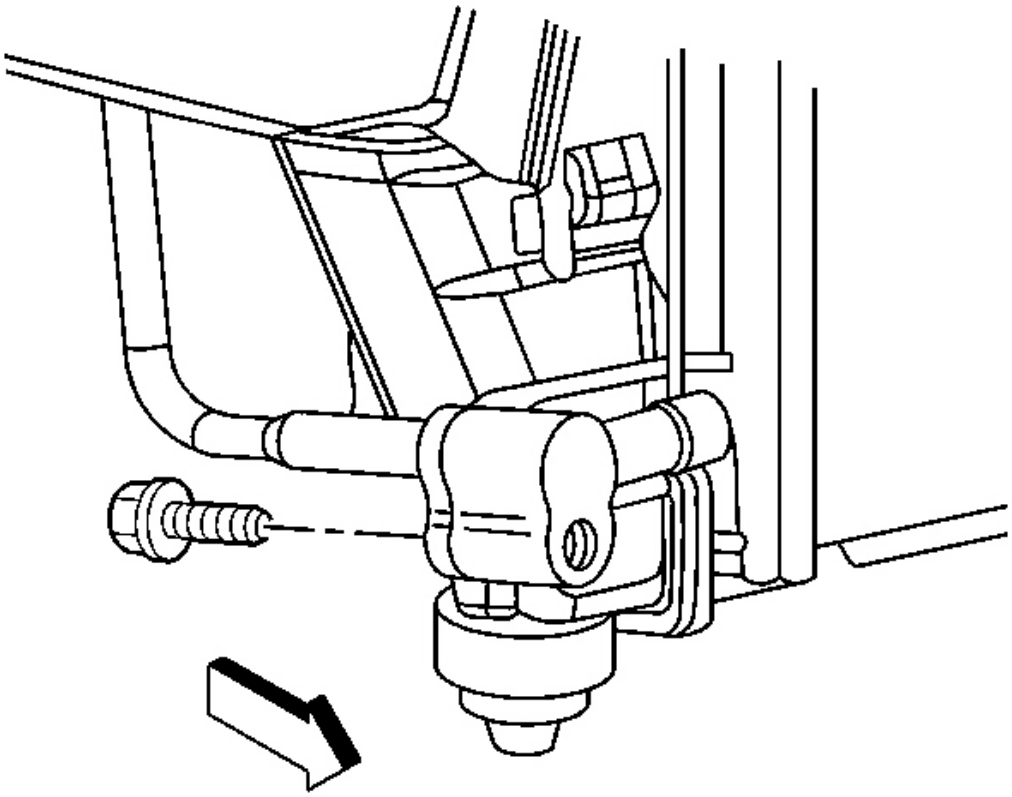

Fig. 43: Identifying Front Evaporator Inlet Line To A/C Condenser Lower Bolt
Courtesy of GENERAL MOTORS CORP.

6. Raise and support the vehicle. Refer to **Lifting and Jacking the Vehicle** in General Information.
7. Remove the front evaporator inlet line to A/C condenser lower bolt.

IMPORTANT: Immediately cap or tape the open A/C components immediately in order to prevent contamination.

8. Disconnect the front evaporator line inlet from the A/C condenser.
9. Remove and discard the sealing washer.
10. Cap or tape off the A/C condenser.
11. Lower the vehicle.

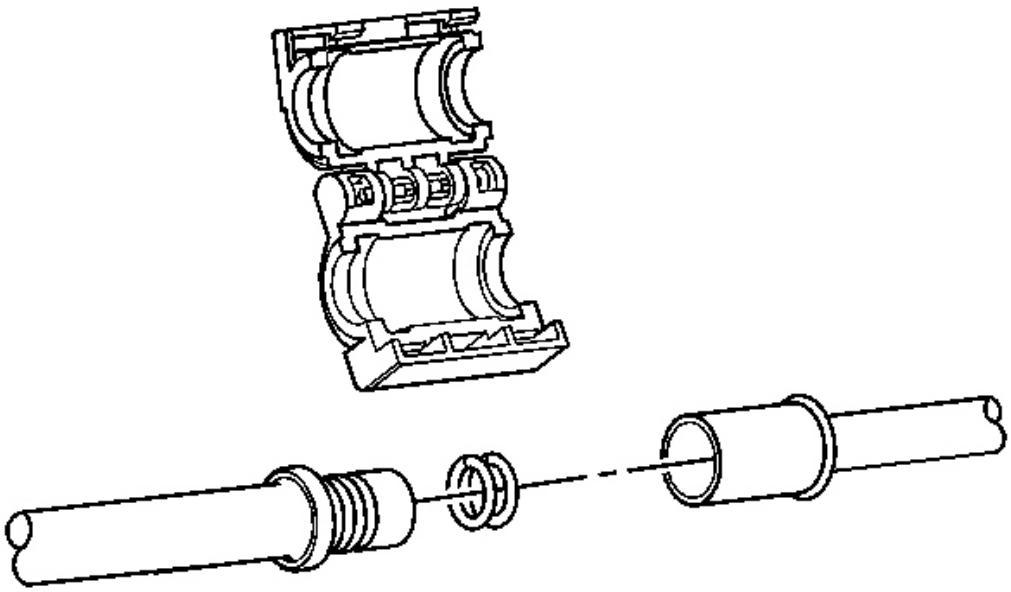

Fig. 44: A/C Tube Connector & Components
Courtesy of GENERAL MOTORS CORP.

12. Disconnect the front evaporator inlet line from the evaporator rear line assembly.
13. Remove and discard the O-rings.
14. Cap or tape the evaporator rear line assembly.

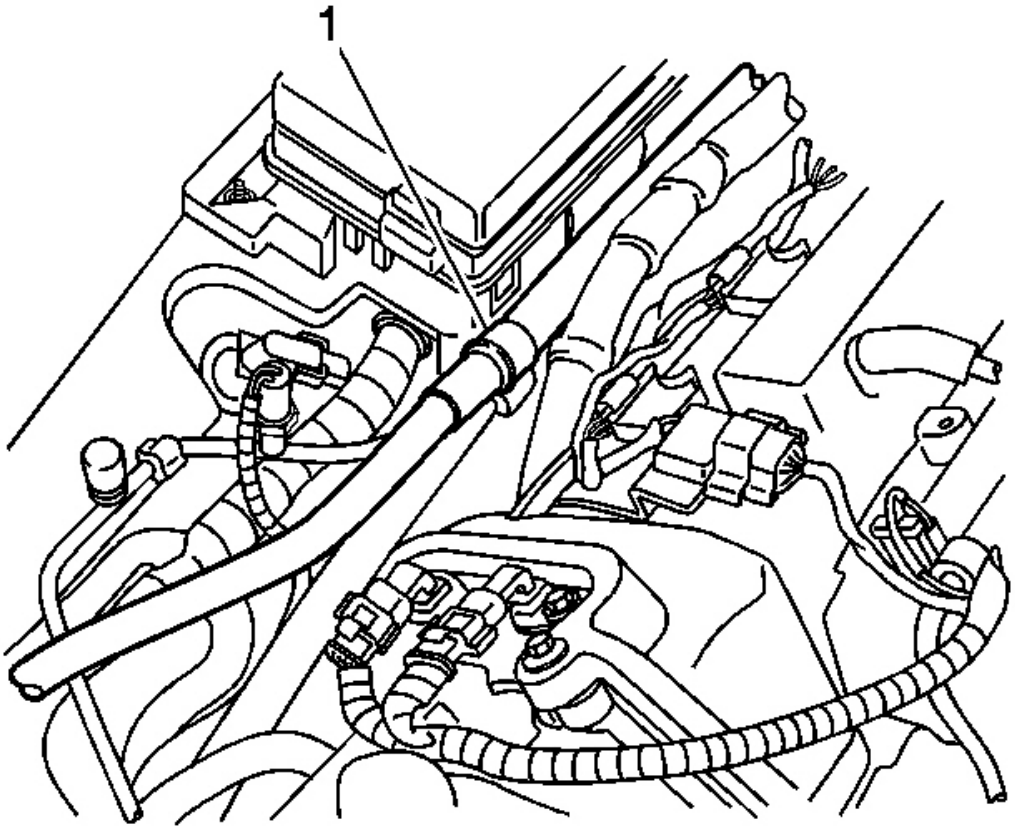

Fig. 45: View Of Underhood Junction Box Retainer Clip
Courtesy of GENERAL MOTORS CORP.

15. Disconnect the surge tank outlet hose and the inlet heater hose from the underhood junction box retainer clip (1).
16. Remove the front evaporator inlet line from the vehicle.

Installation Procedure

1. Install the front evaporator inlet line to the vehicle.

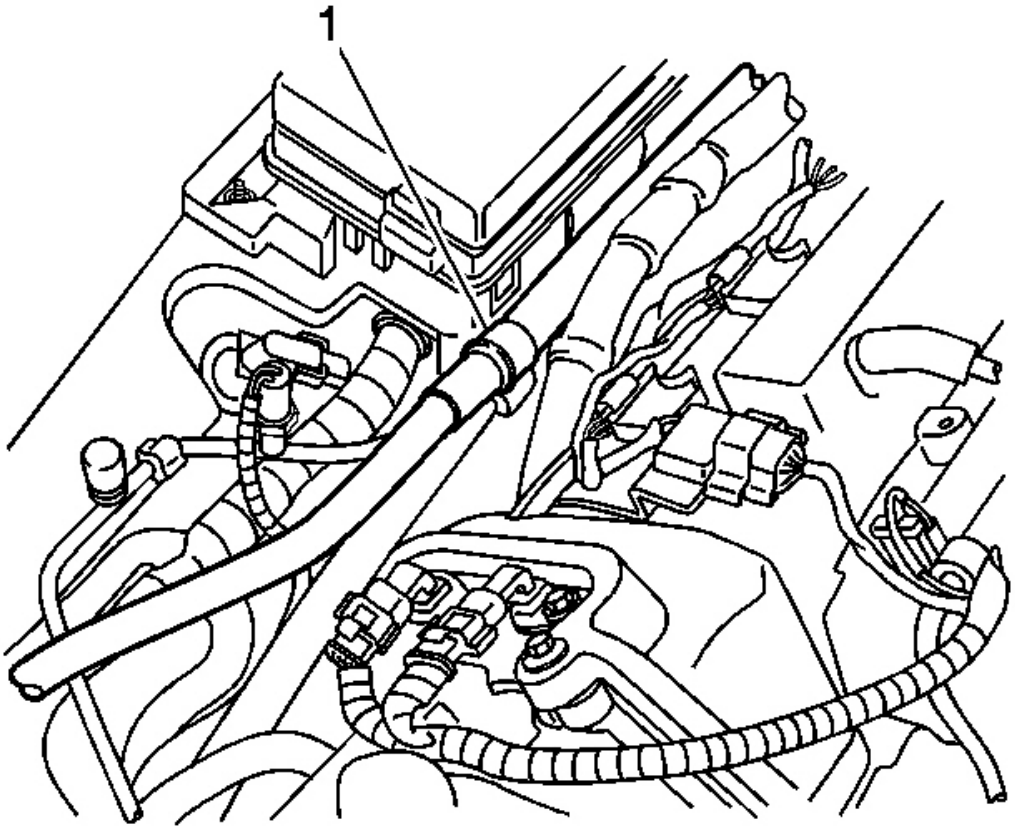

Fig. 46: View Of Underhood Junction Box Retainer Clip
Courtesy of GENERAL MOTORS CORP.

2. Connect the surge tank outlet hose and the inlet heater hose to the underhood junction box retainer clip (1).

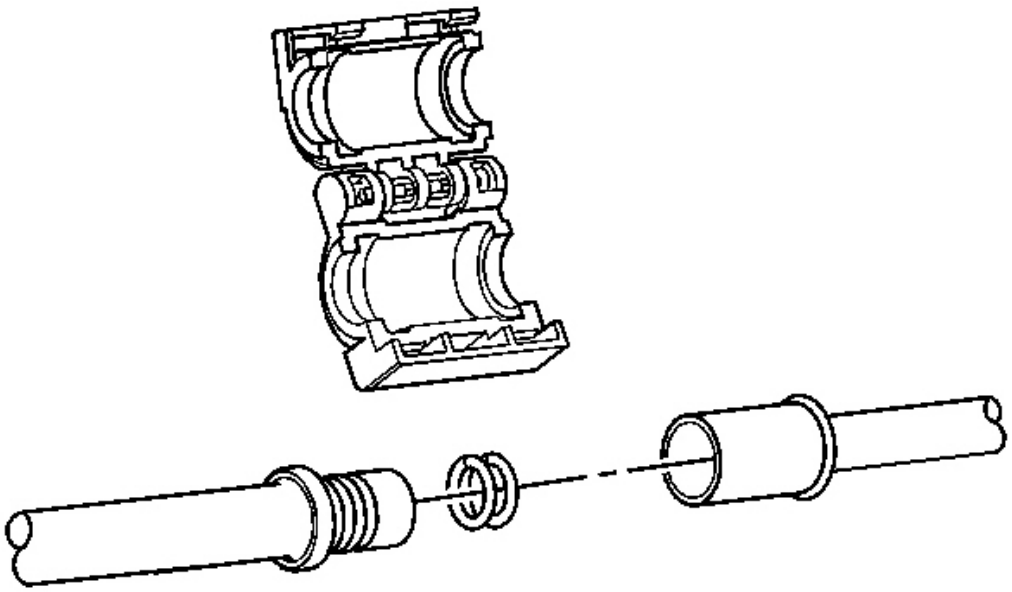

Fig. 47: A/C Tube Connector & Components
Courtesy of GENERAL MOTORS CORP.

3. Remove cap or tape from the evaporator rear line assembly.
4. Install new O-rings to the rear evaporator line assembly. Refer to **O-Ring Replacement**.
5. Connect the front evaporator inlet line to the evaporator rear line assembly.
6. Raise the vehicle.
7. Remove cap or tape from the A/C condenser.
8. Install a new sealing washer to the front evaporator inlet line. Refer to **Sealing Washer Replacement**.
9. Connect the front evaporator inlet line to the A/C condenser.

NOTE: Refer to Fastener Notice in Cautions and Notices.

10. Install the front evaporator inlet line to A/C condenser lower bolt.

    Tighten: Tighten the bolt to 16 N.m (12 lb ft).

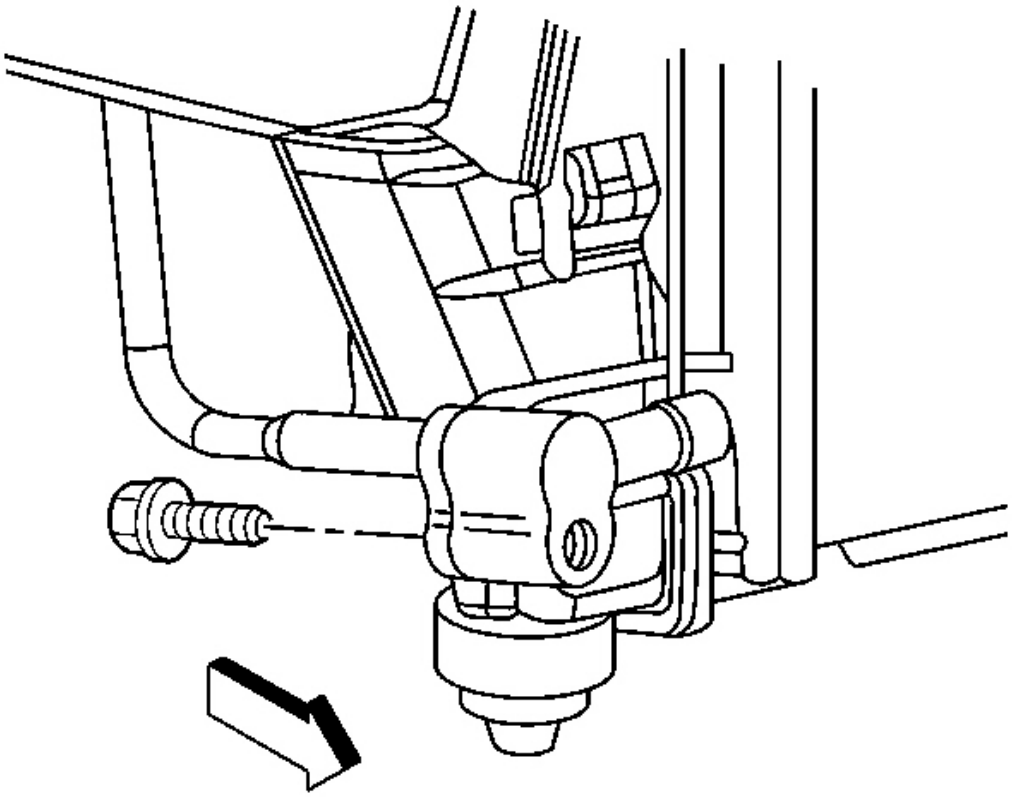

Fig. 48: Identifying Front Evaporator Inlet Line To A/C Condenser Lower Bolt
Courtesy of GENERAL MOTORS CORP.

11. Lower the vehicle.
12. Connect the front evaporator inlet line to the body retaining clip (1).

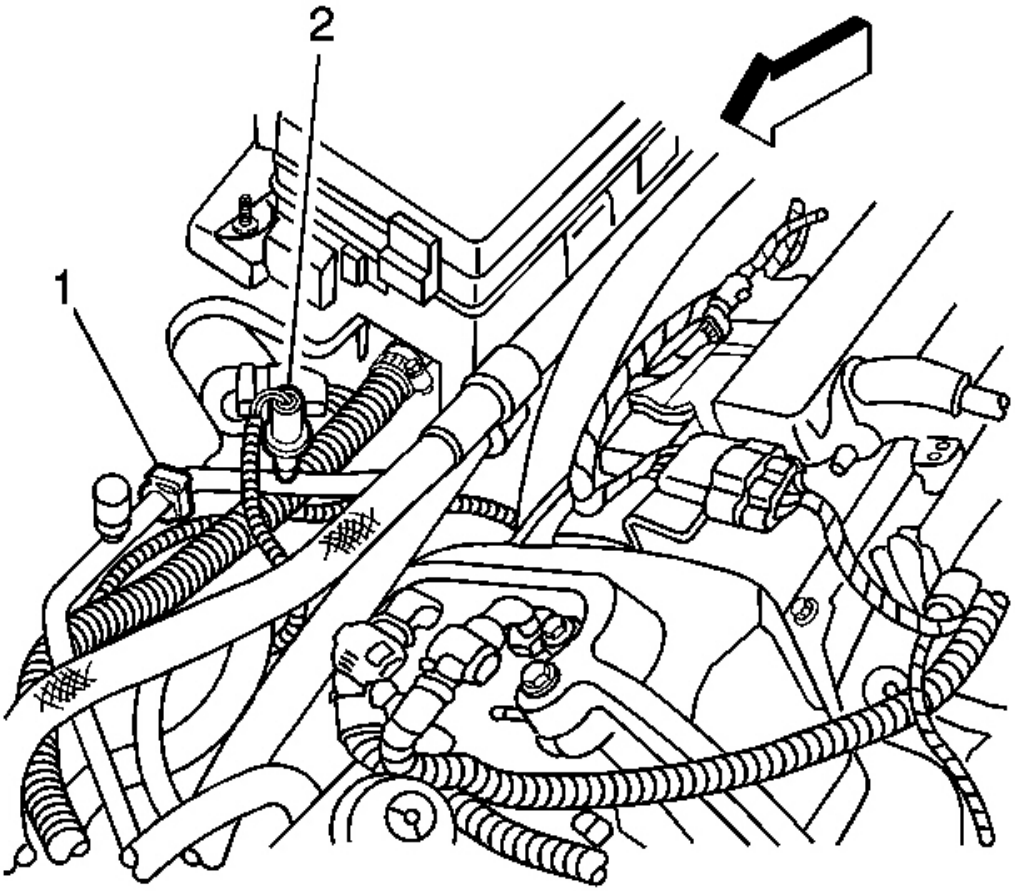

Fig. 49: Identifying Body Retaining Clip & Refrigerant Pressure Sensor Electrical Connector
Courtesy of GENERAL MOTORS CORP.

13. Connect the refrigerant pressure sensor electrical connector (2).

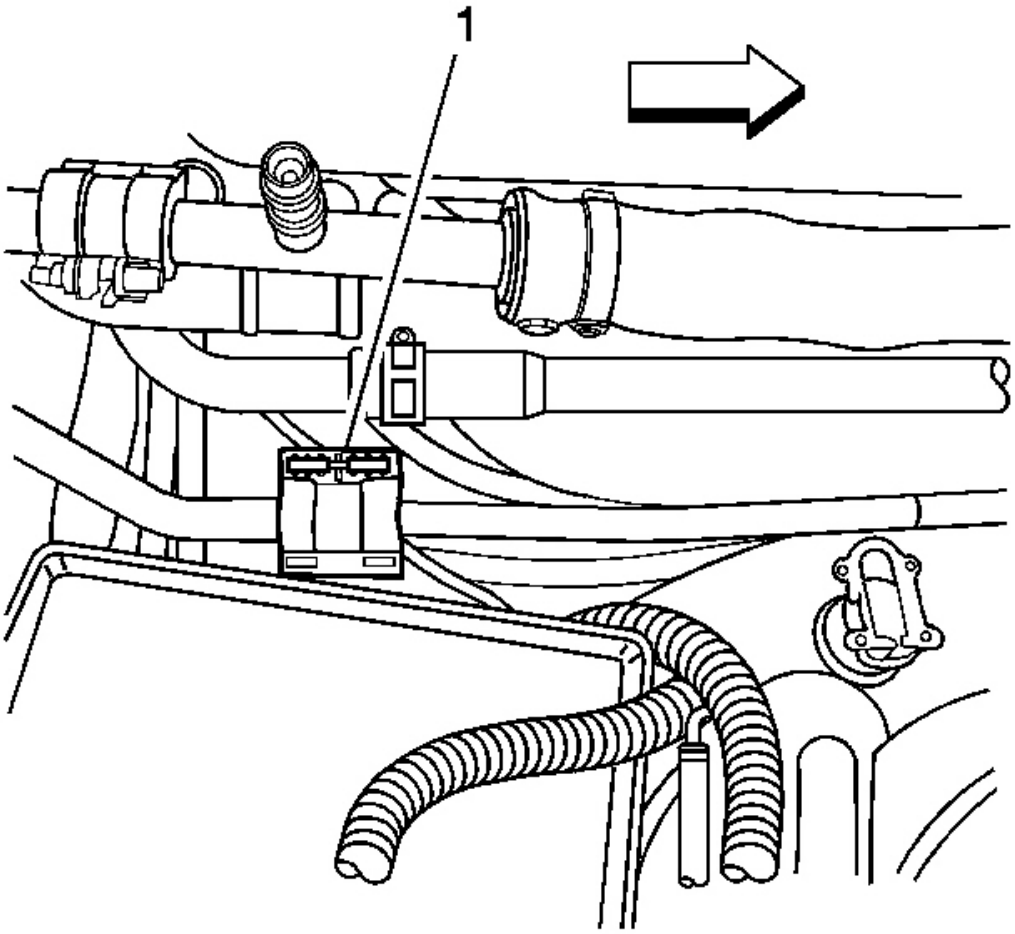

Fig. 50: A/C Tube Connector At Evaporator Rear Line Assembly
Courtesy of GENERAL MOTORS CORP.

14. Connect the A/C tube connector (1) at the evaporator rear line assembly. Refer to **A/C Line/Tube Connector Removal/Replacement**.
15. Install the battery. Refer to **Battery Replacement** in Engine Electrical.
16. Evacuate and recharge the A/C system. Refer to **Refrigerant Recovery and Recharging**.
17. Leak test the fittings of the component using **J 39400-A** .

EVAPORATOR TUBE REPLACEMENT - REAR

Tools Required

J 39400-A Halogen Leak Detector

Removal Procedure

1. Recover the refrigerant from the A/C system. Refer to **Refrigerant Recovery and Recharging**.
2. Remove the battery. Refer to **Battery Replacement** in Engine Electrical.
3. Remove the intake manifold. Refer to **Intake Manifold Replacement** in Engine Mechanical - 4.6L.

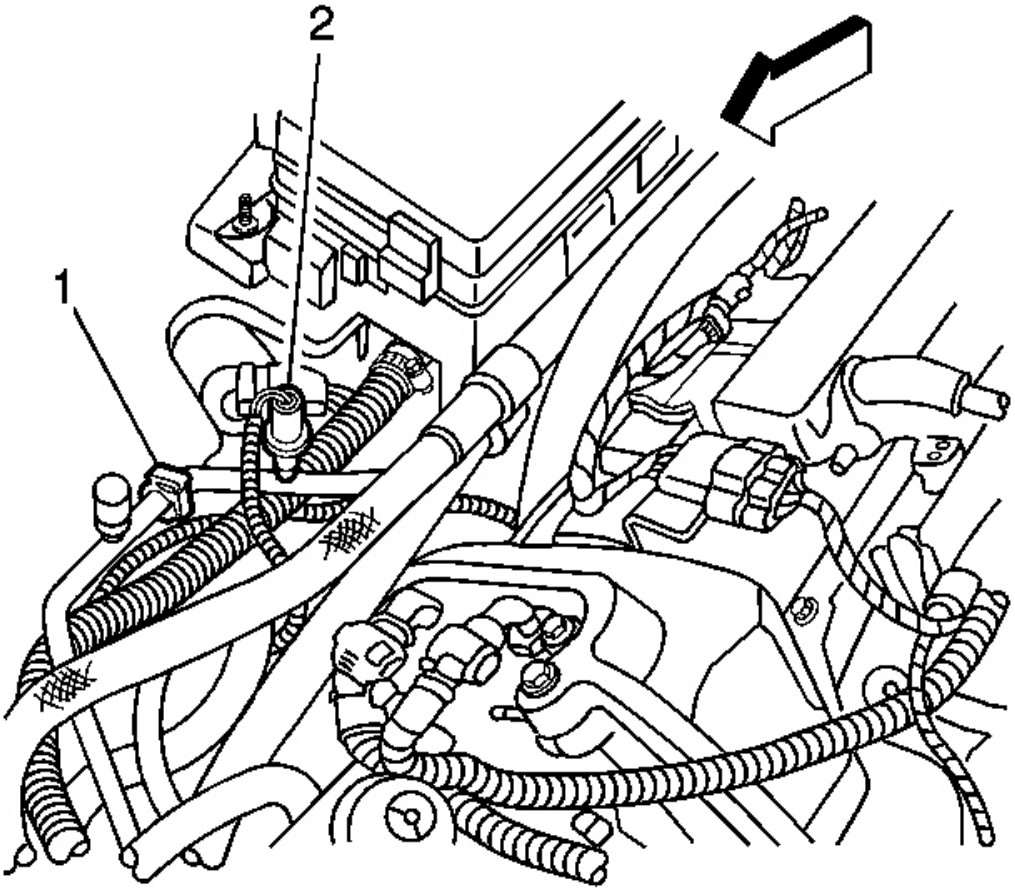

Fig. 51: Identifying Body Retaining Clip & Refrigerant Pressure Sensor Electrical Connector
Courtesy of GENERAL MOTORS CORP.

4. Disconnect the front evaporator inlet line from the body retaining clip (1).
5. Disconnect the refrigerant pressure sensor electrical connector (2).

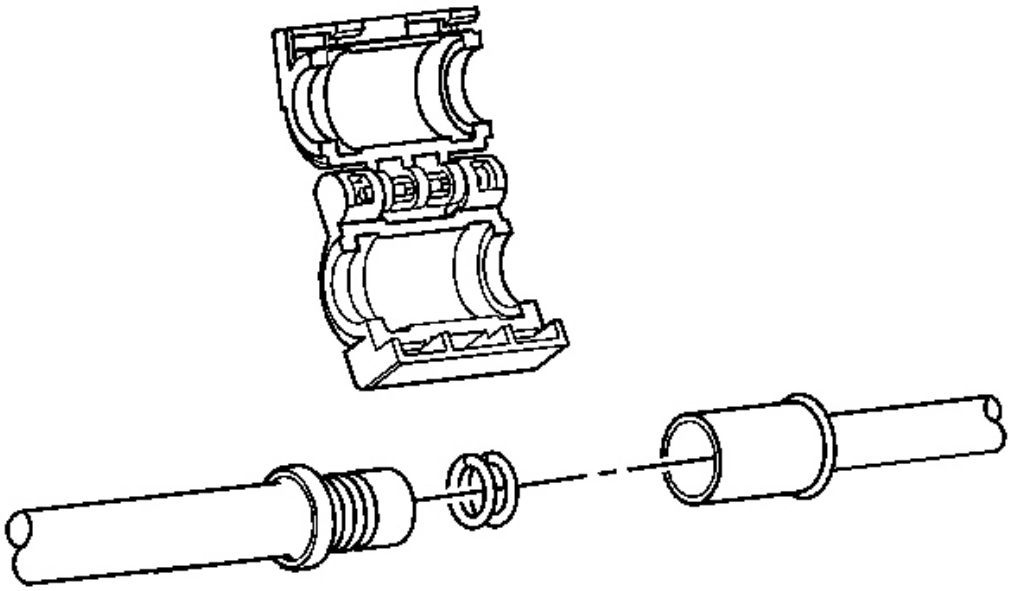

Fig. 52: A/C Tube Connector & Components
Courtesy of GENERAL MOTORS CORP.

6. Disconnect and remove the A/C tube connectors from the evaporator rear line assembly. Refer to **A/C Line/Tube Connector Removal/Replacement**.

IMPORTANT: Immediately cap or tape the open A/C components immediately in order to prevent contamination.

7. Disconnect the front evaporator inlet line from the evaporator rear line assembly.
8. Remove and discard O-rings.
9. Cap or tape the front evaporator inlet line.
10. Disconnect the A/C compressor line from the evaporator rear line assembly.
11. Remove and discard the O-rings.
12. Cap or tape the front evaporator line and A/C compressor line.

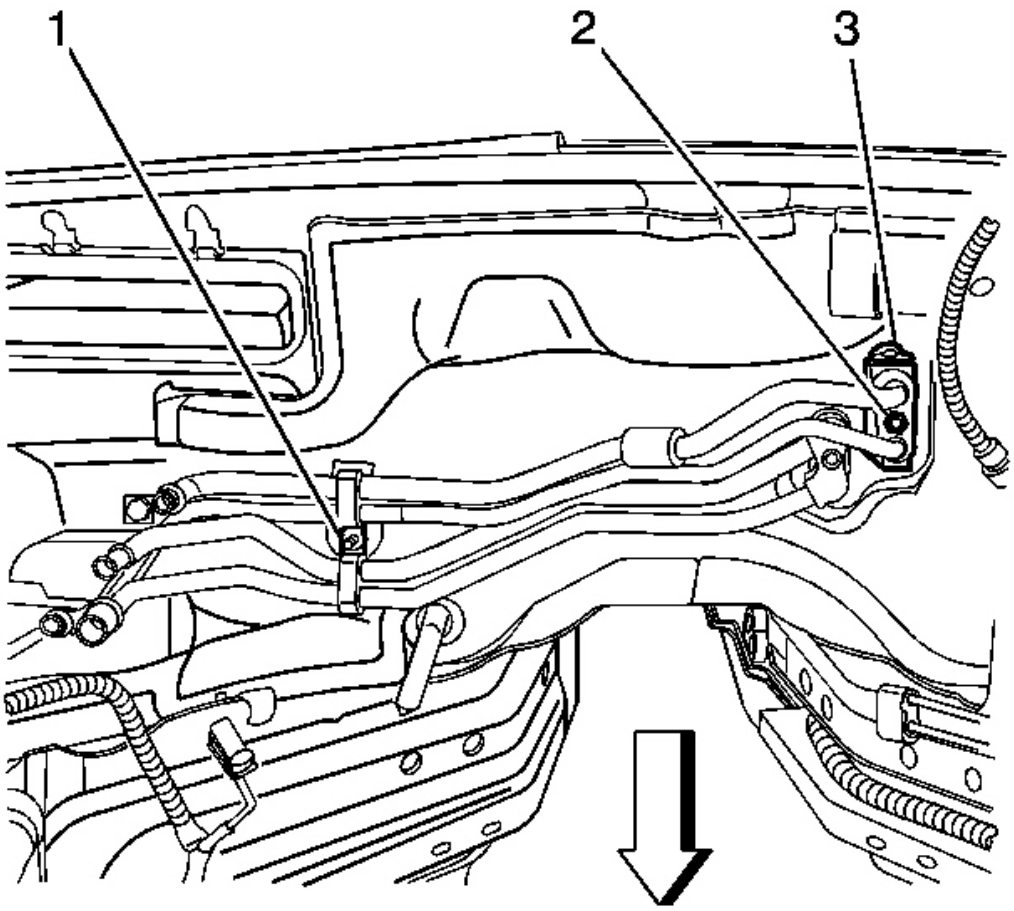

Fig. 53: Identifying Heater Pipe Bracket Retaining Nut, TXV & TXV Block Fitting Nut
Courtesy of GENERAL MOTORS CORP.

13. Remove the heater pipe bracket retaining nut (1) from the cowl stud.
14. Remove the TXV block fitting nut (2).
15. Disconnect the evaporator rear line assembly from the TXV (3).
16. Disconnect the evaporator rear line assembly from the retainer bracket.
17. Remove the rear evaporator line assembly from the vehicle.
18. Remove and discard the seal washers.
19. Cap or tape the TXV (3).

Installation Procedure

IMPORTANT: If replacing the evaporator rear line assembly, add the specified amount of PAG oil directly to the evaporator rear line assembly. Refer to Refrigerant System Capacities.

1. Remove the cap or tape from the TXV (3).
2. Install new seal washers to the evaporator rear line assembly. Refer to **Sealing Washer Replacement**.
3. Install the evaporator rear line assembly to the vehicle.
4. Connect the evaporator rear line assembly to the retainer bracket.

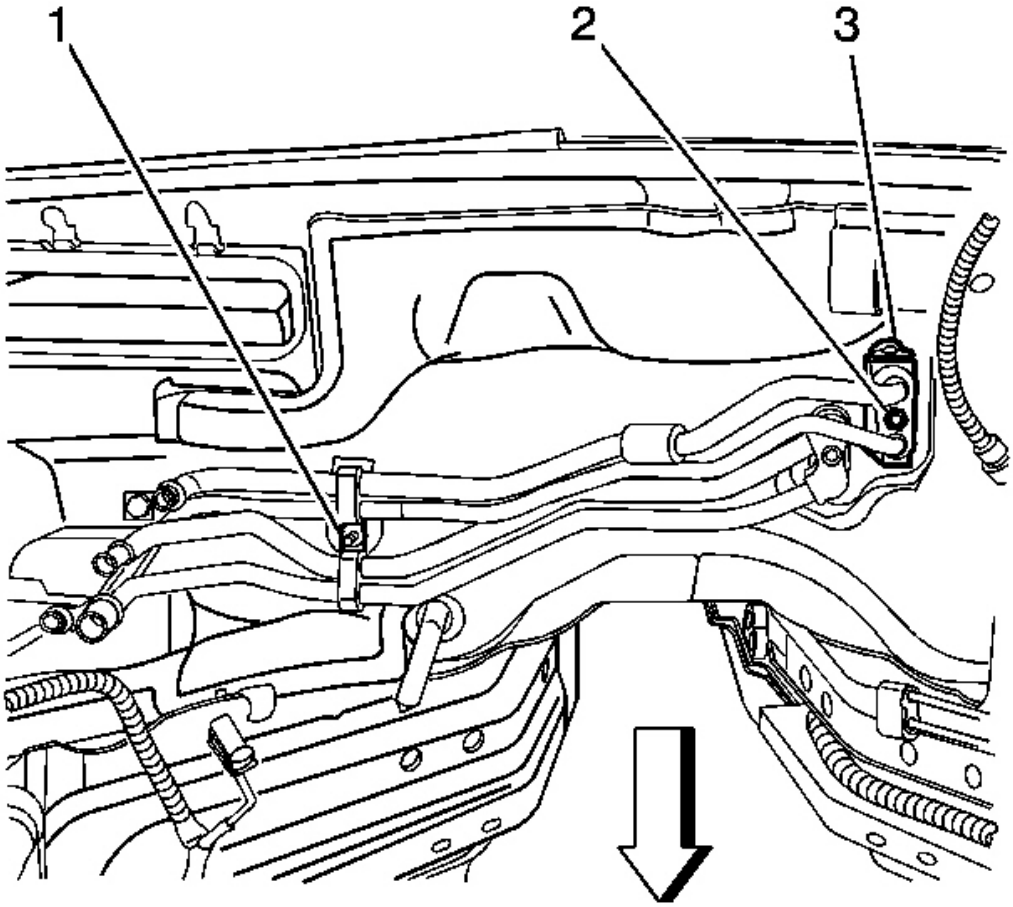

Fig. 54: Identifying Heater Pipe Bracket Retaining Nut, TXV & TXV Block Fitting Nut
Courtesy of GENERAL MOTORS CORP.

5. Connect the evaporator rear line assembly to the TXV (3).

NOTE: Refer to Fastener Notice in Cautions and Notices.

6. Install the TXV block fitting nut (2).

   Tighten: Tighten the nut to 20 N.m (15 lb ft).

7. Install the heater pipe bracket retaining nut (1) to the cowl stud.

   Tighten: Tighten the nut to 10 N.m (7 lb ft).

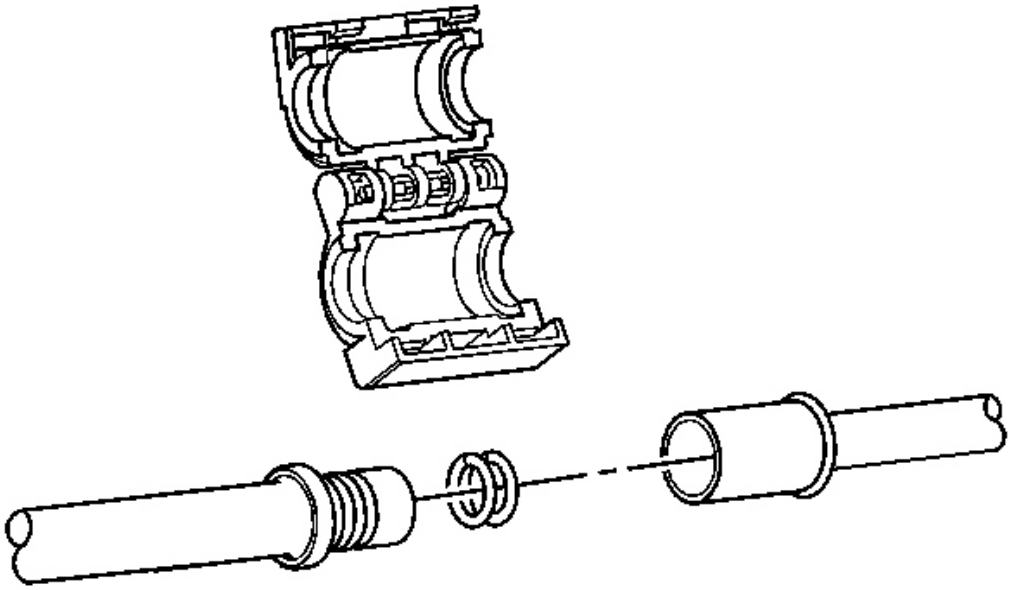

Fig. 55: A/C Tube Connector & Components
Courtesy of GENERAL MOTORS CORP.

8. Remove cap or tape from the front evaporator line and A/C compressor line.

9. Install new O-rings to the rear evaporator line assembly. Refer to **O-Ring Replacement**.
10. Connect the A/C compressor line to the evaporator rear line assembly.
11. Connect the front evaporator line to the evaporator rear line assembly.
12. Connect the A/C tube connectors onto the evaporator rear line assembly. Refer to **A/C Line/Tube Connector Removal/Replacement**.
13. Connect the refrigerant pressure sensor electrical connector (2).

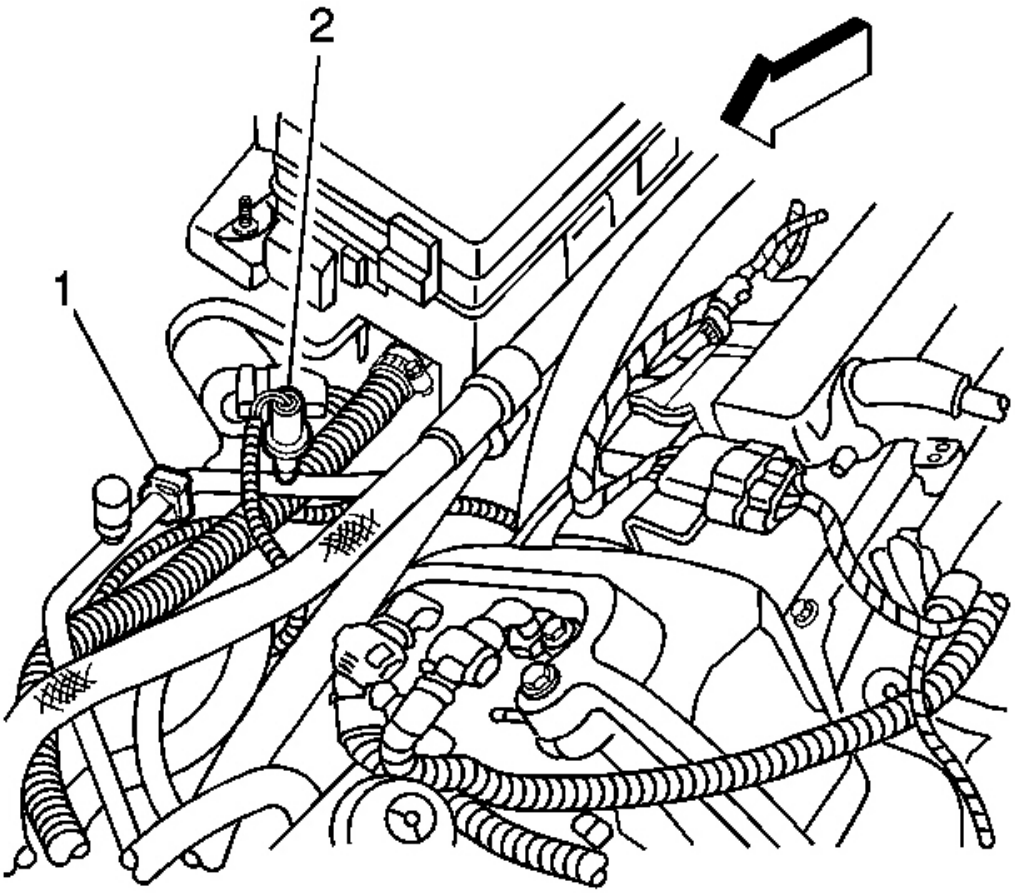

Fig. 56: Identifying Body Retaining Clip & Refrigerant Pressure Sensor Electrical Connector
Courtesy of GENERAL MOTORS CORP.

14. Connect the front evaporator inlet line to the body retaining clip (1).

15. Install the intake manifold. Refer to **Intake Manifold Replacement** in Engine Mechanical - 4.6L.
16. Install the battery. Refer to **Battery Replacement** in Engine Electrical.
17. Evacuate and recharge the A/C system. Refer to **Refrigerant Recovery and Recharging**.
18. Leak test the fittings of the component using **J 39400-A** .

AIR CONDITIONING (A/C) REFRIGERANT FILTER REPLACEMENT

Tools Required

J 39400-A Halogen Leak Detector

Removal Procedure

1. Recover the refrigerant from the A/C system. Refer to **Refrigerant Recovery and Recharging**.
2. Raise and support the vehicle. Refer to **Lifting and Jacking the Vehicle** in General Information.

IMPORTANT: Immediately cap or tape the open A/C components immediately in order to prevent contamination.

3. Remove the front evaporator inlet line to A/C condenser bolt.

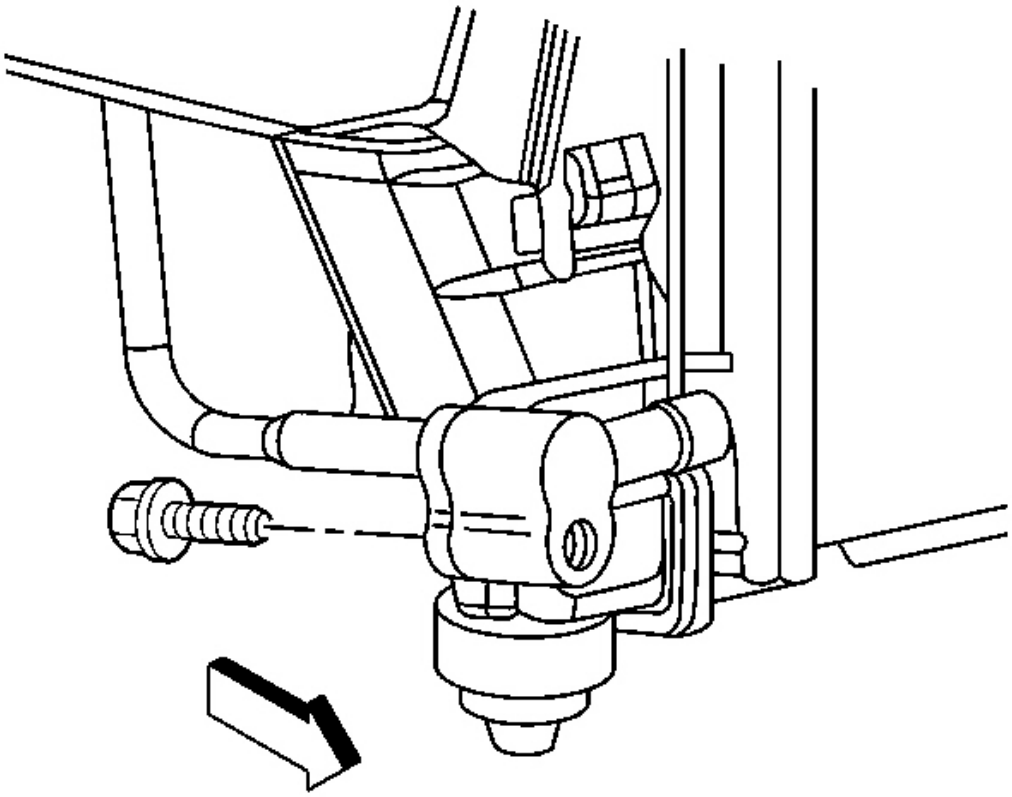

Fig. 57: Identifying Front Evaporator Inlet Line To A/C Condenser Lower Bolt
Courtesy of GENERAL MOTORS CORP.

4. Disconnect the front evaporator inlet line from the A/C condenser.
5. Cap or tape off the A/C condenser port.

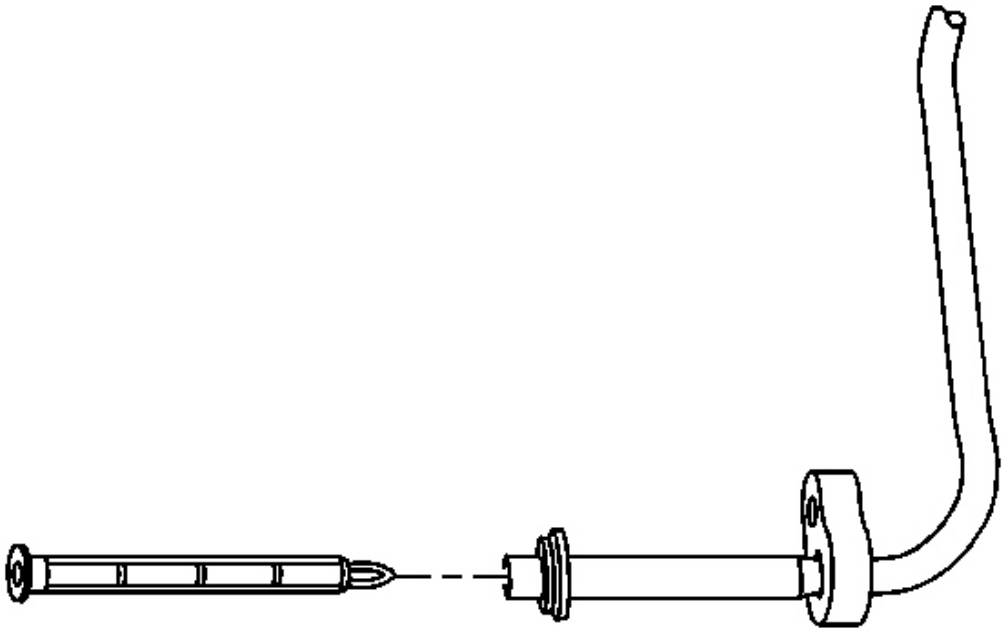

Fig. 58: A/C Refrigerant Filter & Front Evaporator Inlet Line
Courtesy of GENERAL MOTORS CORP.

6. Remove A/C refrigerant filter from the front evaporator inlet line.
7. Remove and discard the seal washer from the front evaporator inlet line.
8. Cap or tape off the front evaporator inlet line.

Installation Procedure

1. Remove the cap or the tape from the front evaporator inlet line.
2. Install a new seal washer to the front evaporator inlet line. Refer to **Sealing Washer Replacement**.

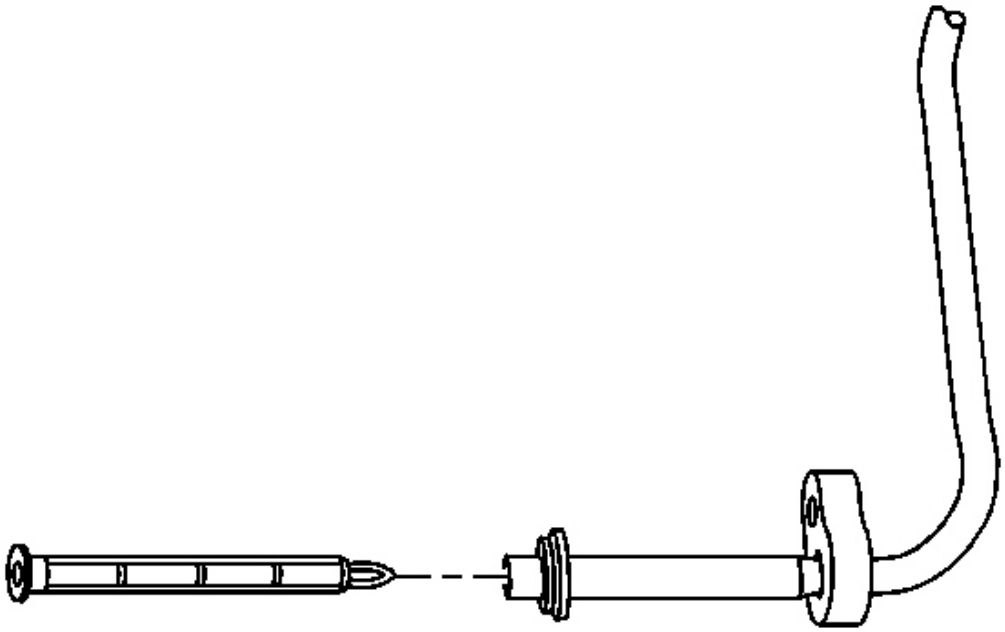

Fig. 59: A/C Refrigerant Filter & Front Evaporator Inlet Line
Courtesy of GENERAL MOTORS CORP.

3. Install the A/C refrigerant filter to the front evaporator inlet line.
4. Remove the cap or tape from the A/C condenser.

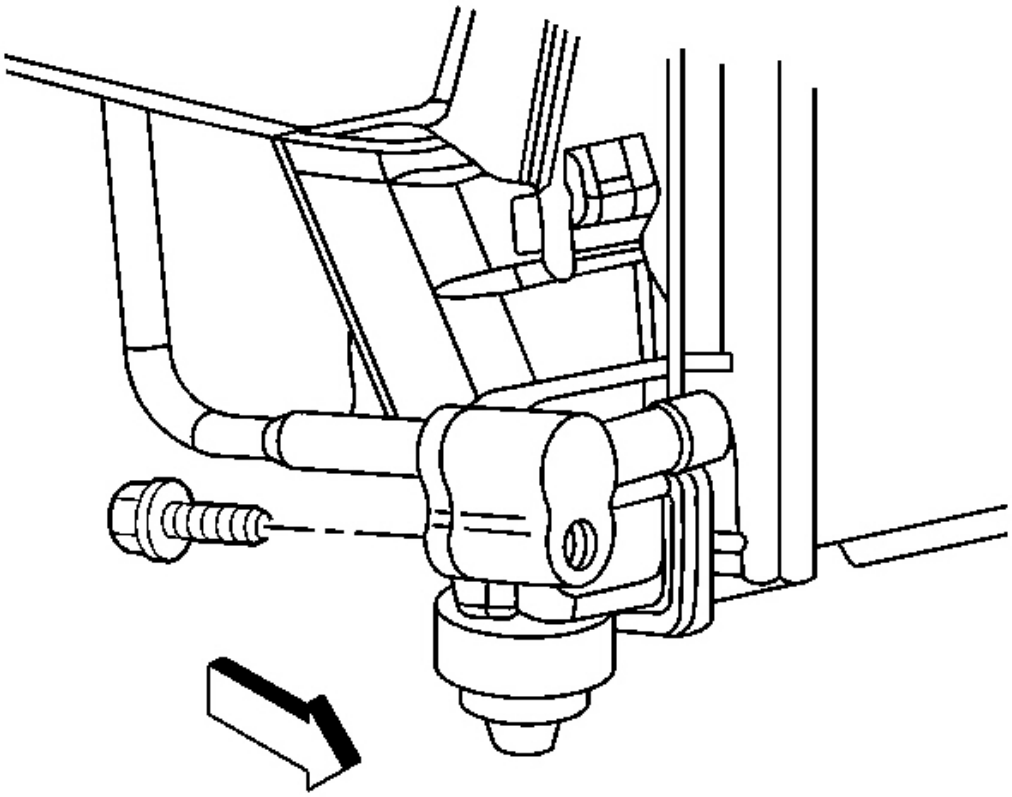

Fig. 60: Identifying Front Evaporator Inlet Line To A/C Condenser Lower Bolt
Courtesy of GENERAL MOTORS CORP.

5. Connect the front evaporator inlet line to the condenser.

NOTE: Refer to Fastener Notice in Cautions and Notices.

6. Install the front evaporator inlet line to condenser bolt.

   Tighten: Tighten the bolt to 16 N.m (12 lb ft).

7. Lower the vehicle.
8. Evacuate and recharge the A/C system. Refer to **Refrigerant Recovery and Recharging**.
9. Leak test the fittings of the component using **J 39400-A** .

COMPRESSOR RELAY REPLACEMENT

Tools Required

J 43244 Relay Puller Pliers

Removal Procedure

1. Remove the electrical center cover.
2. Locate the compressor relay. Refer to **Electrical Center Identification Views** to locate the electrical center where the compressor relay exists.

IMPORTANT:

- **Always note the orientation of the relay.**
- **Make sure the electrical center is secure, as not to put added stress on the wires or terminals.**

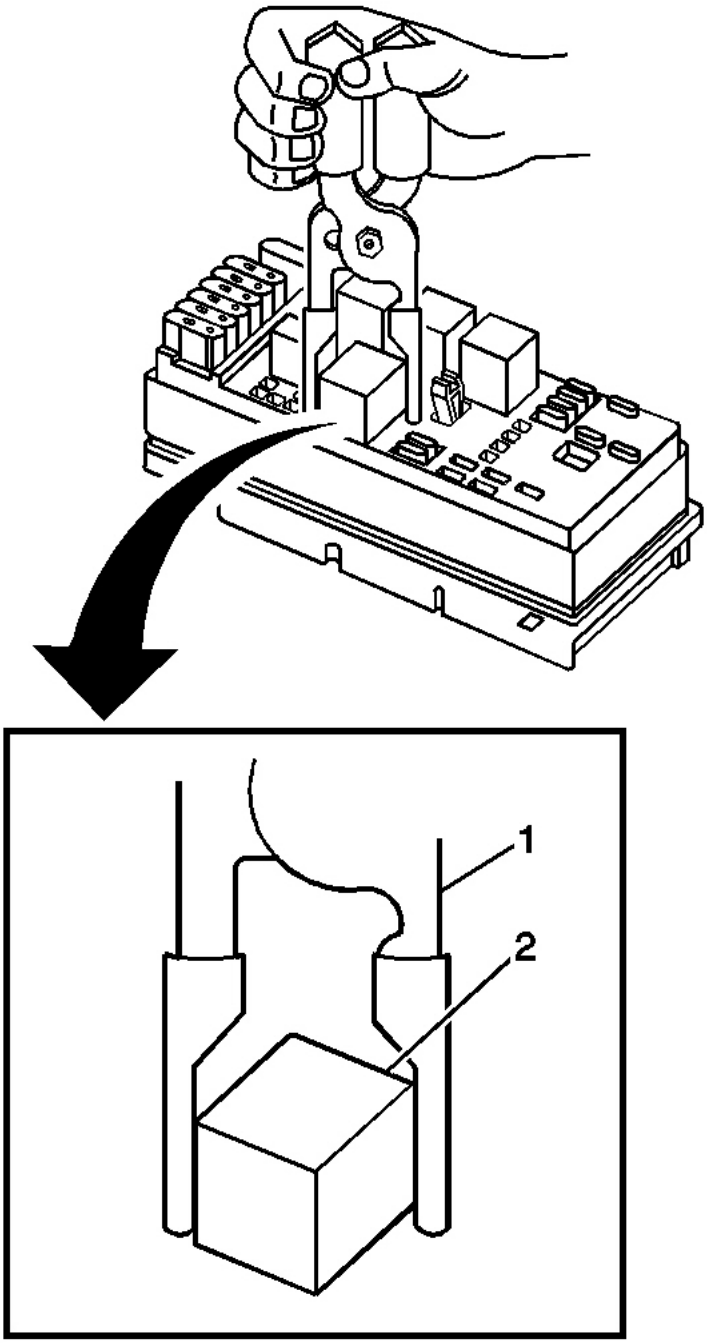

Fig. 61: Removing/Installing Relay Using J 43244
Courtesy of GENERAL MOTORS CORP.

3. Using the **J 43244** (1) position the tool on opposing corners of the compressor relay (2).

NOTE: Use J43244 to pull the relay straight out from the electrical center terminals. The use of pliers or a flat bladed tool could damage the electrical center.

4. Remove the compressor relay (2) from the electrical center.

Installation Procedure

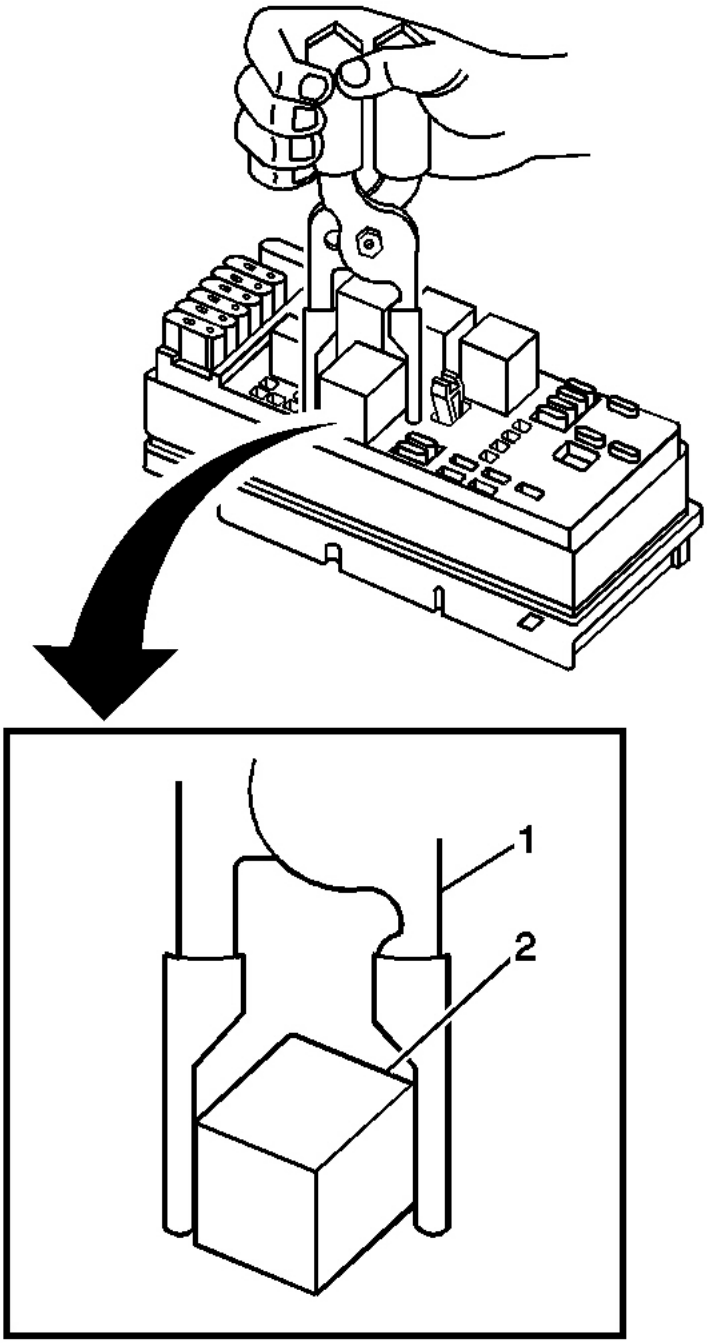

Fig. 62: Removing/Installing Relay Using J 43244
Courtesy of GENERAL MOTORS CORP.

1. Install the compressor relay (2) in the same position as removed.

2. Install the electrical center cover.

SERVICE PORT VALVE CORE REPLACEMENT

Tools Required

- **J 39400-A** Halogen Leak Detector
- **J 46246** Valve Core Tool. See **Special Tools**.

Removal Procedure

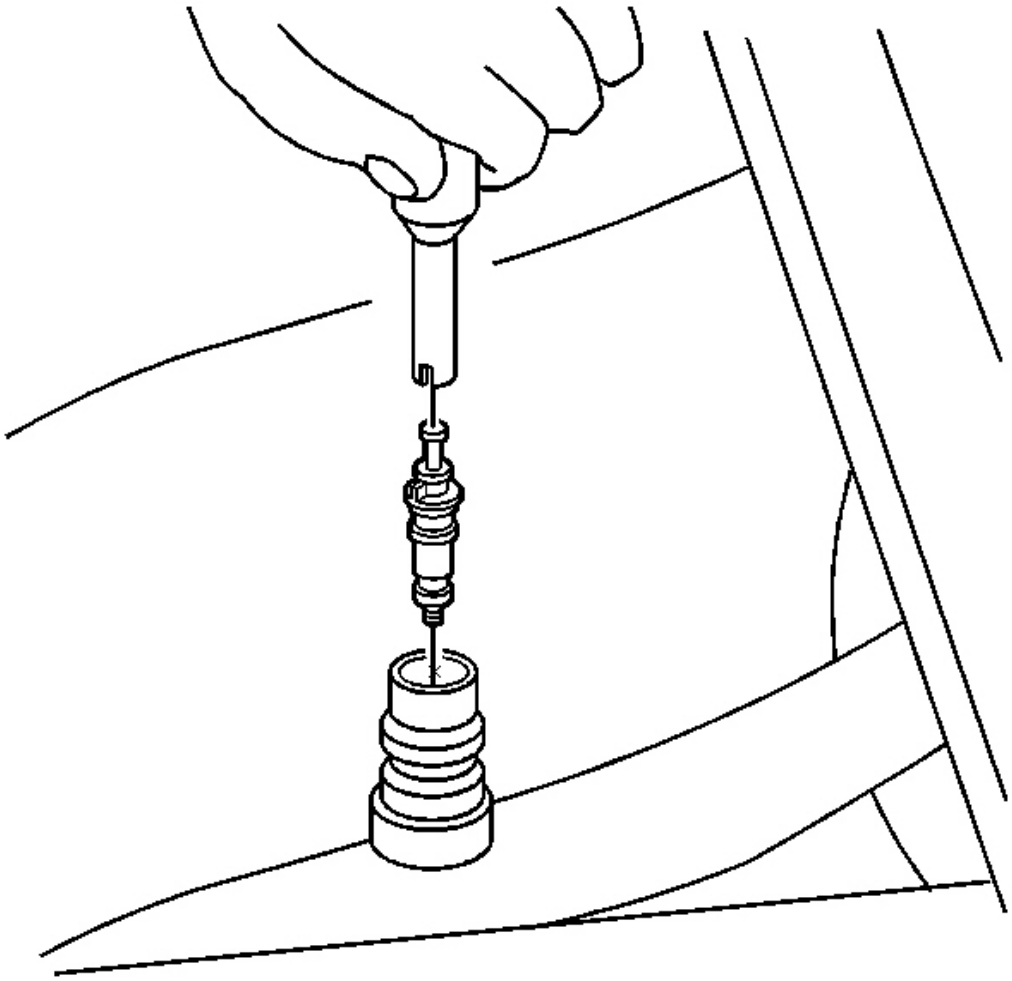

Fig. 63: Exploded View of Service Port & Valve Core
Courtesy of GENERAL MOTORS CORP.

1. Recover the refrigerant from the A/C system. Refer to **Refrigerant Recovery and Recharging**.
2. Using the **J 46246** , remove the valve core from the service port. See **Special Tools**.

Installation Procedure

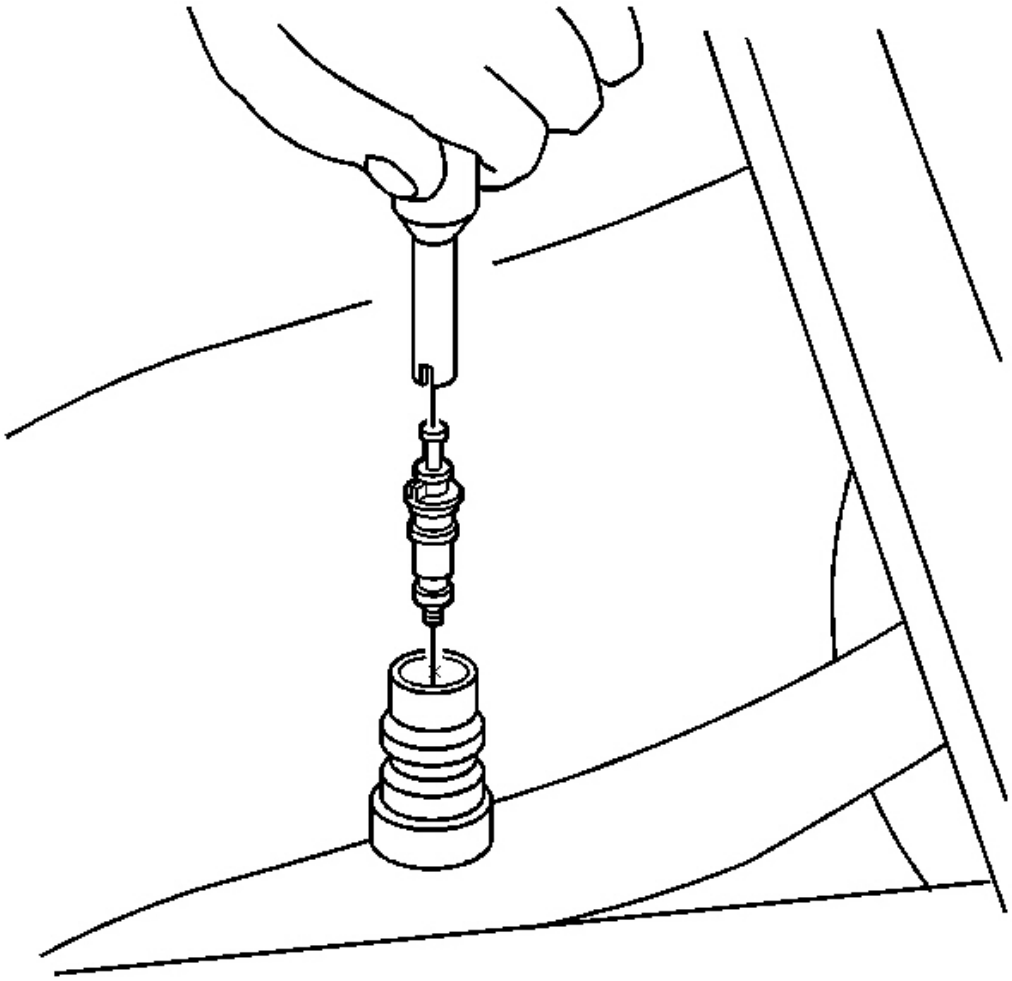

Fig. 64: Exploded View of Service Port & Valve Core
Courtesy of GENERAL MOTORS CORP.

1. Install the valve core to the service port.

NOTE: Refer to Fastener Notice in Cautions and Notices.

2. Using the **J 46246** , tighten the valve core. See **Special Tools**.

   Tighten: Tighten the valve core to 11 N.m (97 lb in).

3. Evacuate and recharge the A/C system. Refer to **Refrigerant Recovery and Recharging**.
4. Leak test the fittings of the component using **J 39400-A** .

THERMAL EXPANSION VALVE REPLACEMENT

Tools Required

J 39400-A Halogen Leak Detector

Removal Procedure

1. Recover the refrigerant from the A/C system. Refer to **Refrigerant Recovery and Recharging**.
2. Remove the rear evaporator line assembly. Refer to **Evaporator Tube Replacement - Rear**.

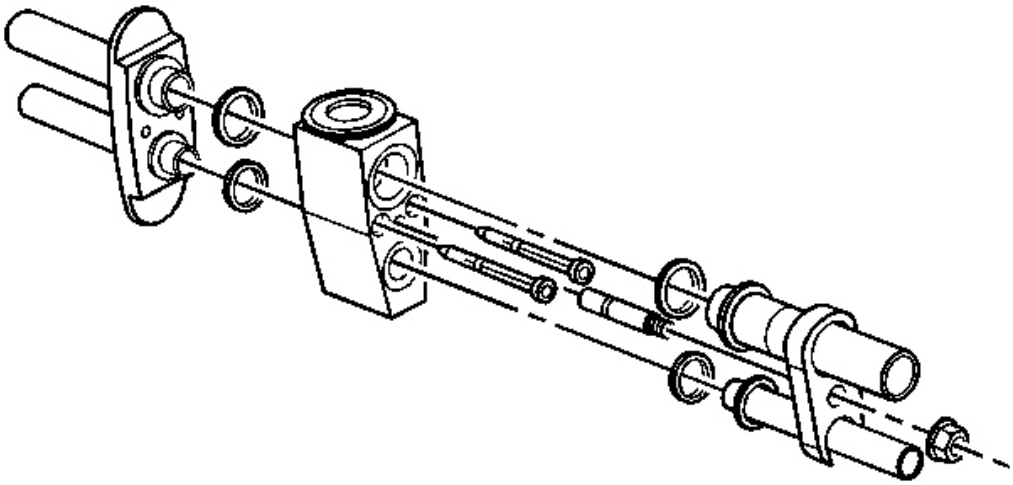

Fig. 65: TXV & Components
Courtesy of GENERAL MOTORS CORP.

3. Remove the TXV to evaporator core mounting bolts.
4. Disconnect the TXV from the evaporator and remove from the vehicle.
5. Remove and discard the evaporator core seal washers.
6. Cap or tape off the evaporator core.

Installation Procedure

1. Remove the cap or tape from the evaporator core.
2. Install new seal washers to the evaporator core. Refer to **Sealing Washer Replacement**.

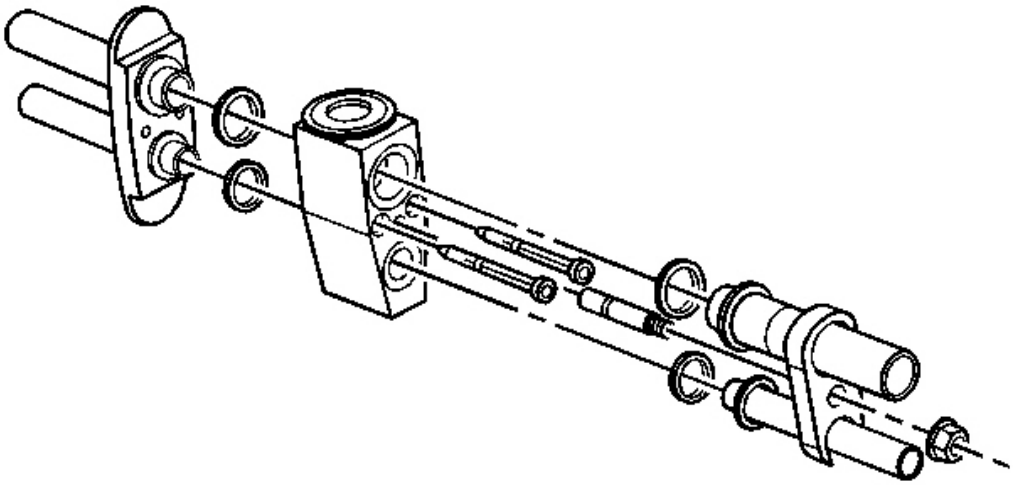

Fig. 66: TXV & Components
Courtesy of GENERAL MOTORS CORP.

3. Install the TXV to the evaporator core.

NOTE: Refer to Fastener Notice in Cautions and Notices.

4. Install the TXV to evaporator core mounting bolts.

   Tighten: Tighten the bolts to 7 N.m (62 lb in).

5. Install the rear evaporator line assembly. Refer to **Evaporator Tube Replacement - Rear**.
6. Evacuate and recharge the A/C system. Refer to **Refrigerant Recovery and Recharging**.
7. Leak test the fittings of the component using **J 39400-A** .

AIR CONDITIONING (A/C) REFRIGERANT PRESSURE SENSOR REPLACEMENT

Tools Required

J 39400-A Halogen Leak Detector

Removal Procedure

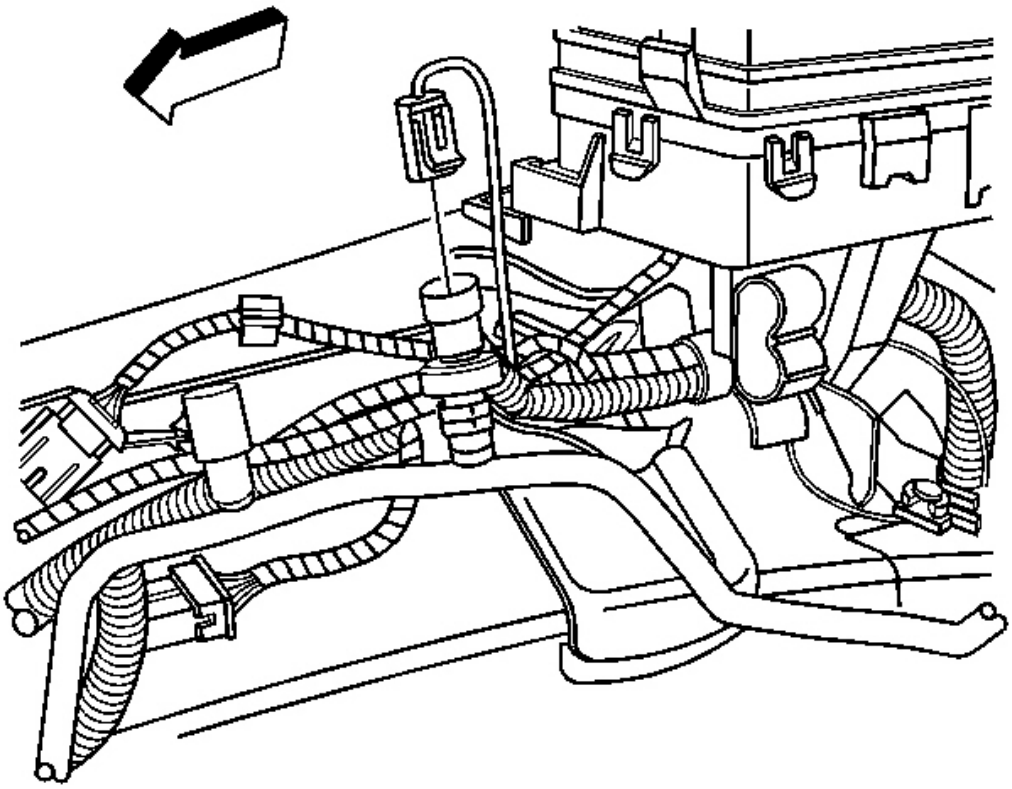

Fig. 67: View Of A/C Electrical Connector & Pressure Sensor
Courtesy of GENERAL MOTORS CORP.

1. Disconnect the A/C refrigerant pressure sensor electrical connector.
2. Remove the A/C refrigerant pressure sensor from the front evaporator line.
3. Remove and discard the O-ring seal from the A/C refrigerant sensor port.

Installation Procedure

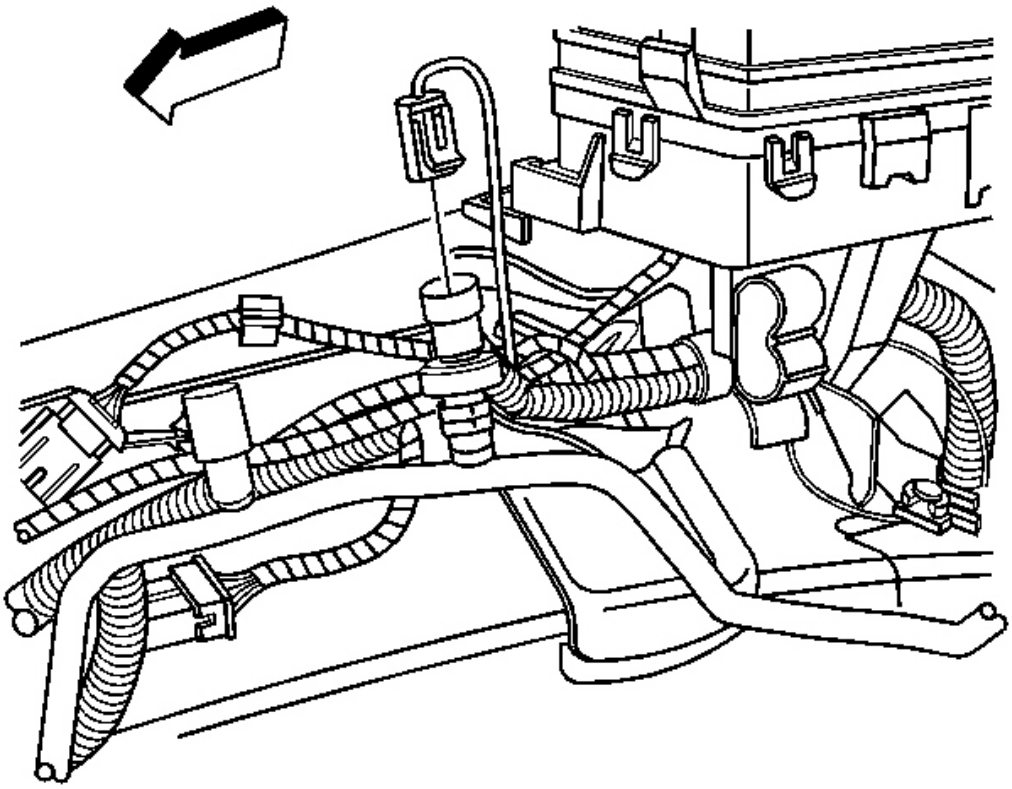

Fig. 68: View Of A/C Electrical Connector & Pressure Sensor
Courtesy of GENERAL MOTORS CORP.

1. Install a new O-ring seal onto the A/C refrigerant pressure sensor port. Refer to **O-Ring Replacement**.

NOTE: Refer to Fastener Notice in Cautions and Notices.

2. Install the A/C refrigerant pressure sensor to the front evaporator line.

   Tighten: Tighten the sensor to 5 N.m (44 lb in).

3. Connect the A/C refrigerant pressure sensor electrical connector.
4. Leak test the fittings of the component using **J 39400-A** .

CONDENSER REPLACEMENT

Tools Required

J 39400-A Halogen Leak Detector

Removal Procedure

IMPORTANT: The condenser and receiver dehydrator are integrated and cannot be serviced separately.

1. Recover the refrigerant from the A/C system. Refer to **Refrigerant Recovery and Recharging**.
2. Remove the upper radiator support. Refer to **Radiator Support Replacement** in Engine Cooling.

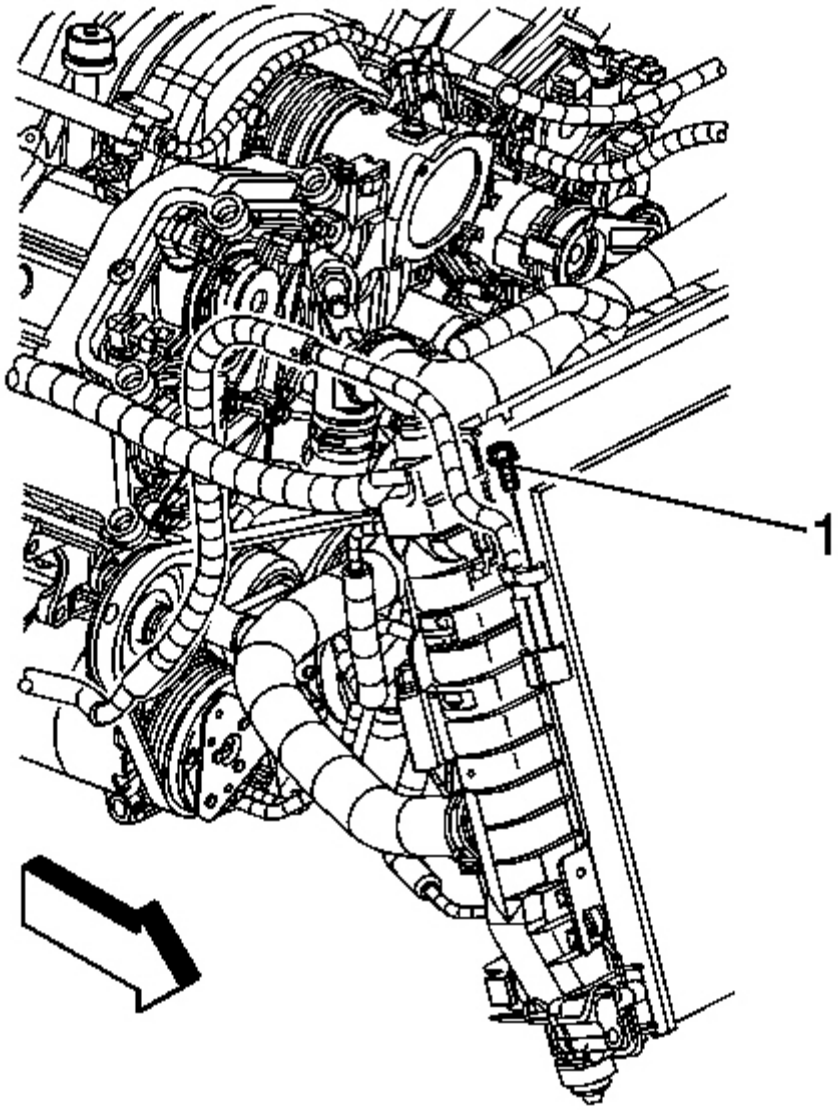

Fig. 69: Identifying A/C Compressor Hose Assembly Bolt & A/C Condenser Fitting
Courtesy of GENERAL MOTORS CORP.

3. Remove the A/C compressor hose assembly to A/C condenser fitting bolt (1).

IMPORTANT: Cap or tape the open A/C components immediately to prevent system contamination.

4. Disconnect the A/C compressor hose assembly from the A/C condenser fitting.
5. Remove and discard the seal washer.
6. Cap or tape the A/C compressor hose assembly.
7. Raise and support the vehicle. Refer to **Lifting and Jacking the Vehicle** in General Information.

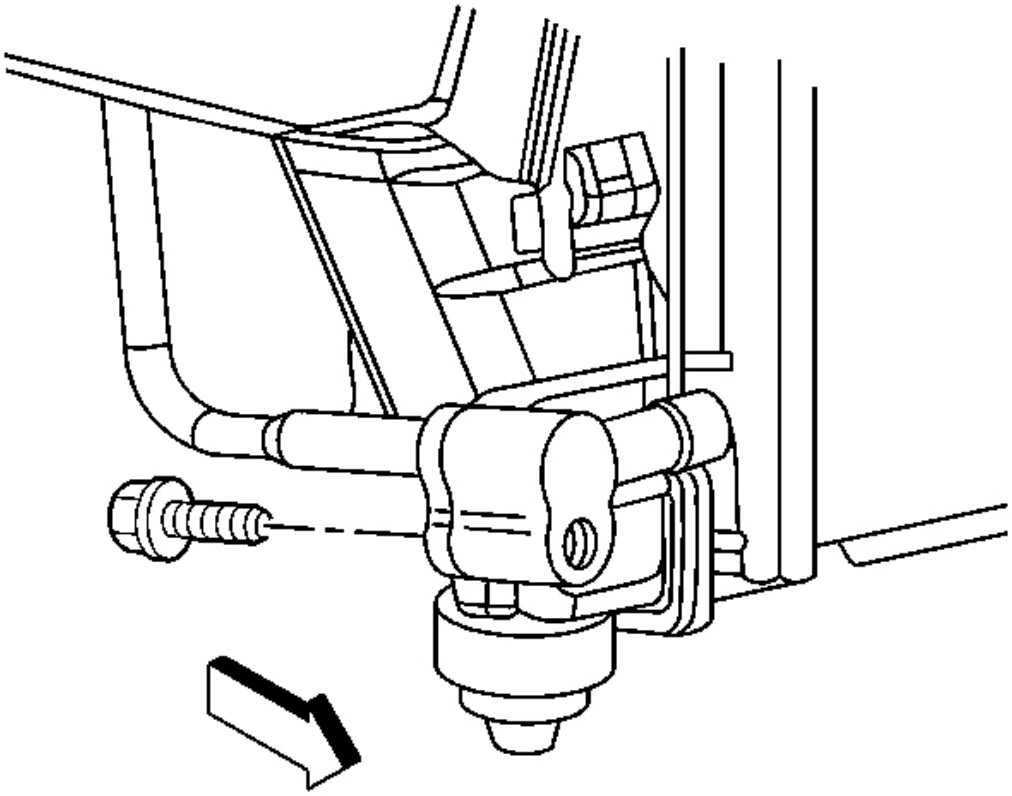

Fig. 70: Identifying Front Evaporator Inlet Line To A/C Condenser Lower Bolt
Courtesy of GENERAL MOTORS CORP.

8. Remove the front evaporator inlet line bolt from the A/C condenser.
9. Disconnect the front evaporator inlet line from the A/C condenser.
10. Remove and discard the seal washer.
11. Cap or tape the front evaporator inlet line.

12. Lower the vehicle.

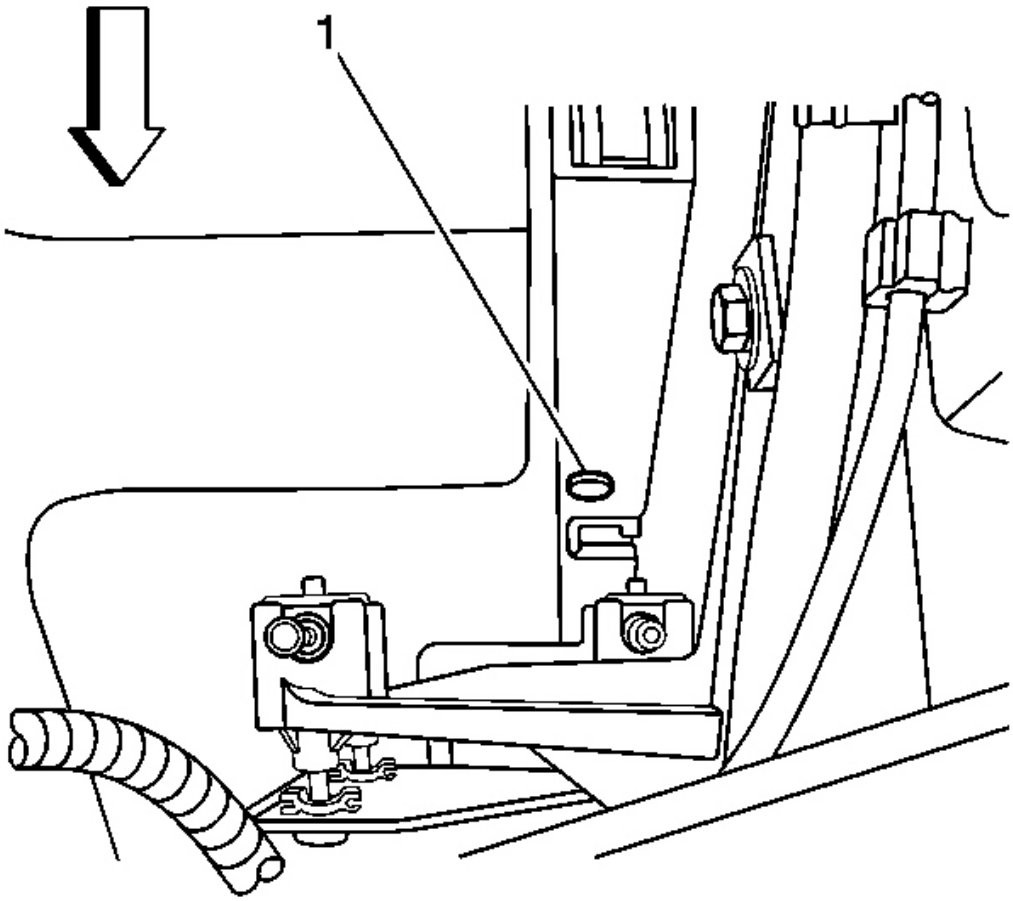

Fig. 71: Removing/Installing LH Radiator Air Baffle Upper Retainer Pin
Courtesy of GENERAL MOTORS CORP.

13. Remove the LH radiator air baffle upper retainer pin (1).

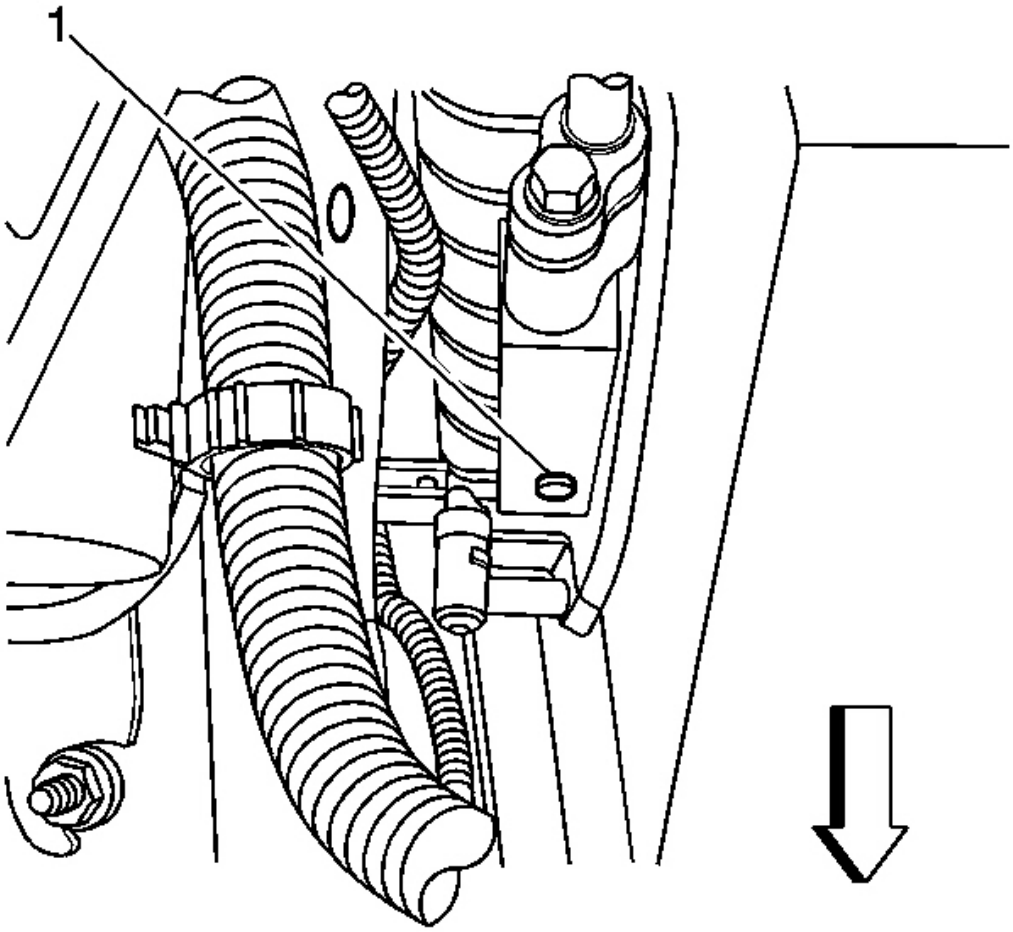

Fig. 72: Removing/Installing RH Radiator Air Baffle Upper Retainer Pin
Courtesy of GENERAL MOTORS CORP.

14. Remove the RH radiator air baffle upper retainer pin (1).

IMPORTANT: Gently tilt the air baffle forward for additional clearance when removing A/C condenser.

15. Raise the A/C condenser along the radiator to release the A/C condenser tabs from the radiator slots.

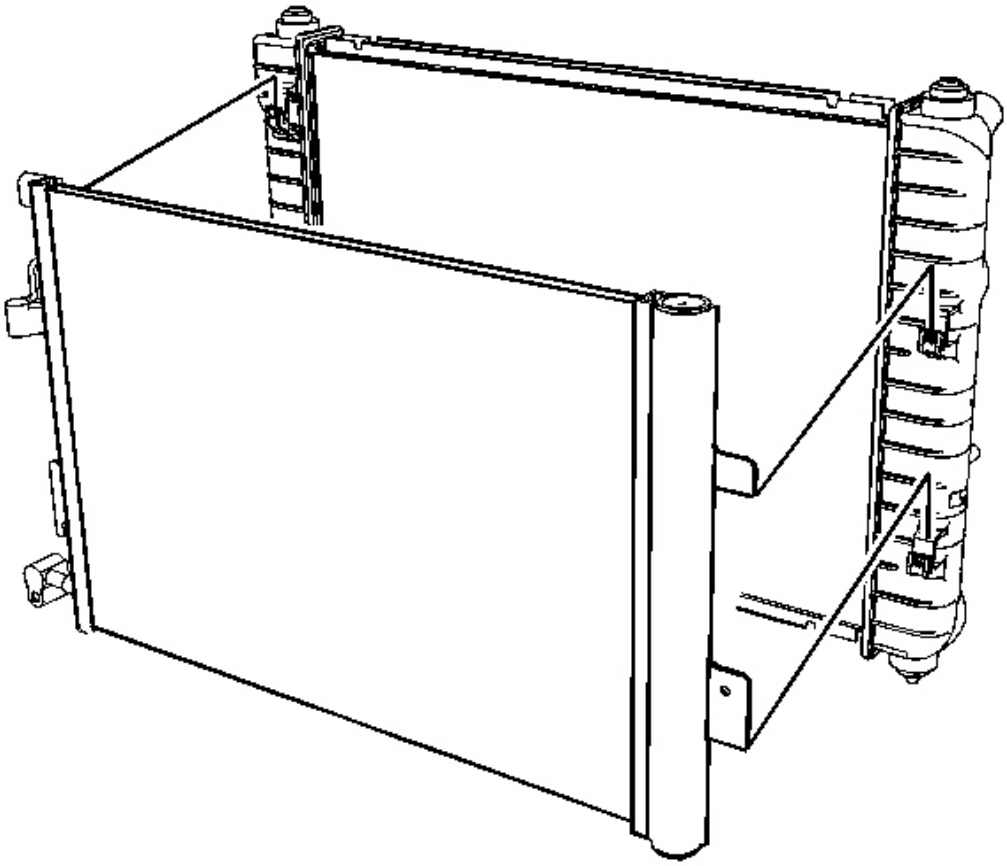

Fig. 73: View of A/C Condenser
Courtesy of GENERAL MOTORS CORP.

16. Remove the A/C condenser from the vehicle.

Installation Procedure

1. If replacing the condenser, add the specified amount of PAG oil directly to the condenser. Refer to **Refrigerant System Capacities**.

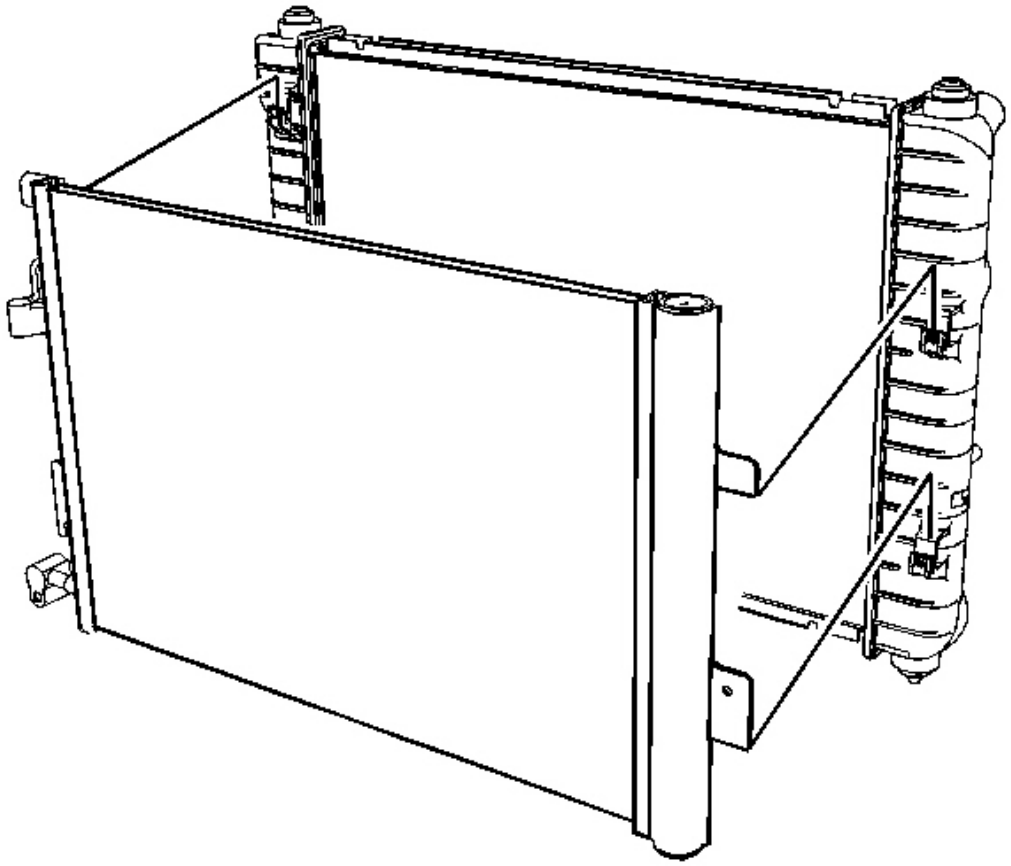

Fig. 74: View of A/C Condenser
Courtesy of GENERAL MOTORS CORP.

2. Position the A/C condenser into the vehicle.
3. Lower the A/C condenser to secure the A/C condenser tabs into the radiator slots.

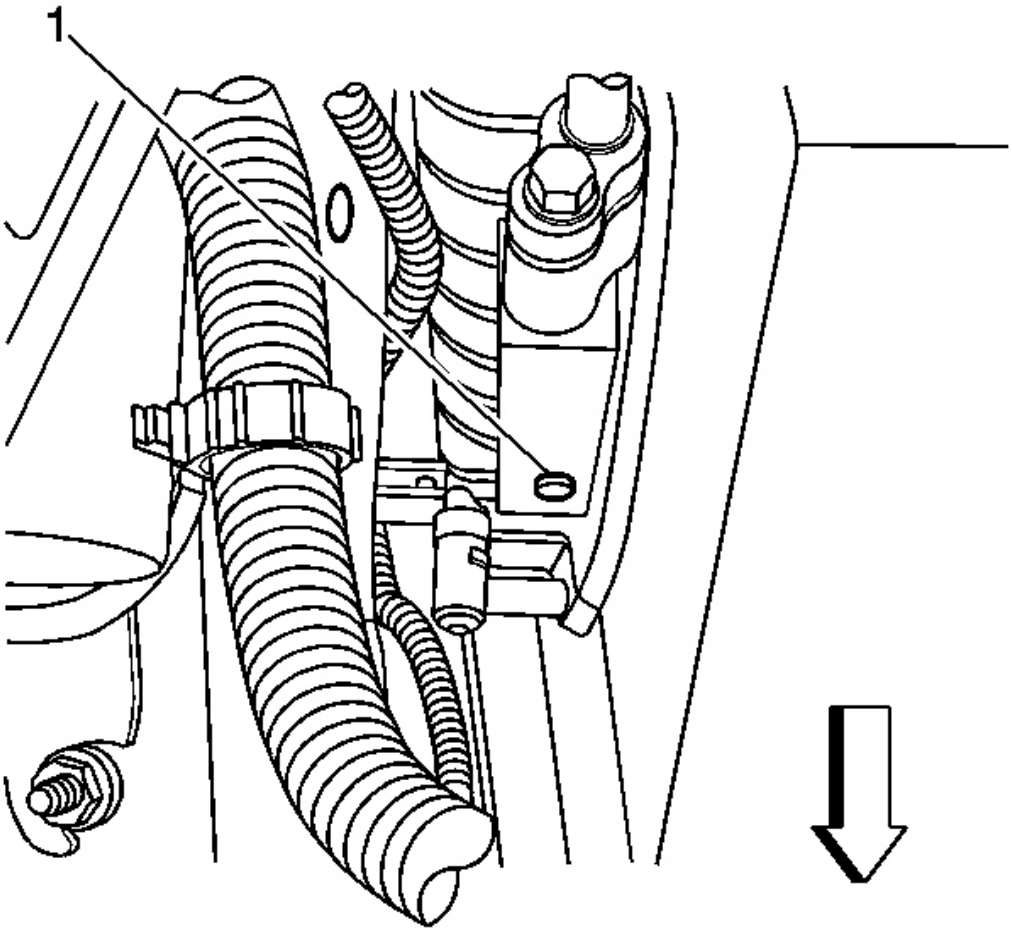

Fig. 75: Removing/Installing RH Radiator Air Baffle Upper Retainer Pin
Courtesy of GENERAL MOTORS CORP.

4. Remove the RH radiator air baffle upper retainer pin (1).

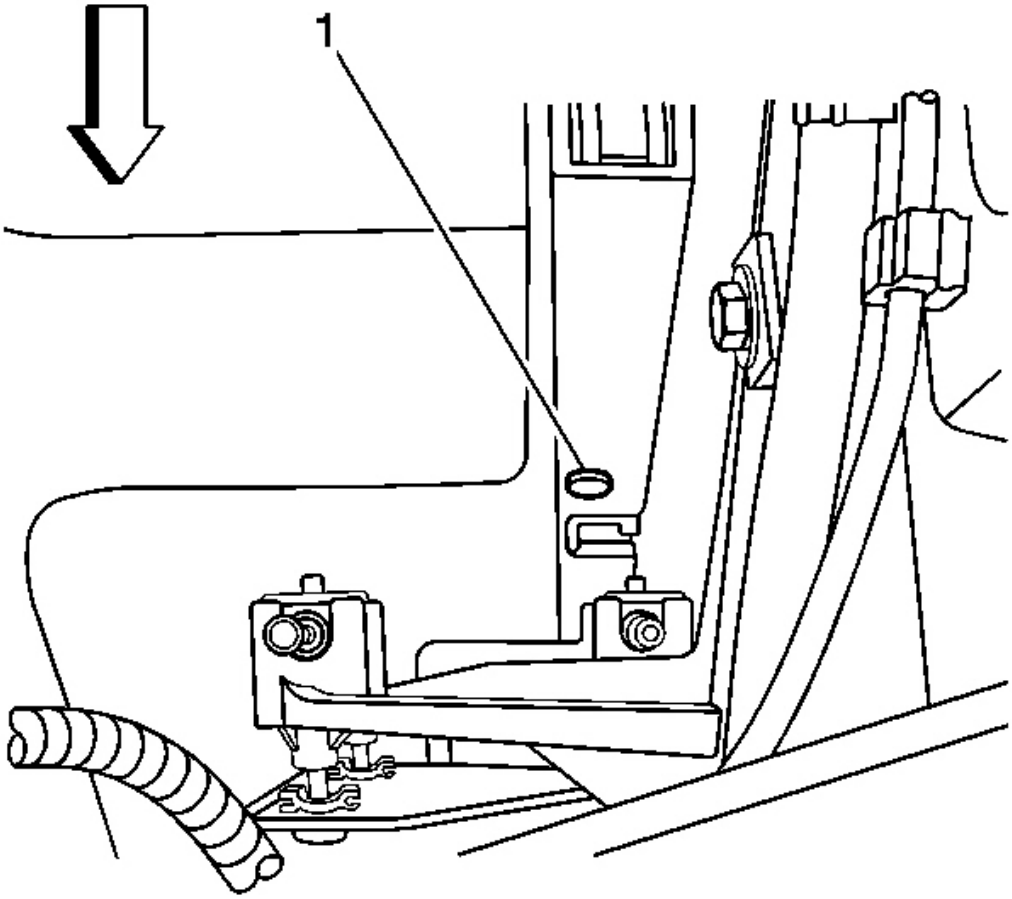

Fig. 76: Removing/Installing LH Radiator Air Baffle Upper Retainer Pin
Courtesy of GENERAL MOTORS CORP.

5. Remove the LH radiator air baffle upper retainer pin (1).
6. Raise and support the vehicle.
7. Remove the cap or tape from the front evaporator inlet line.
8. Install a new seal washer onto the front evaporator inlet line. Refer to **Sealing Washer Replacement**.

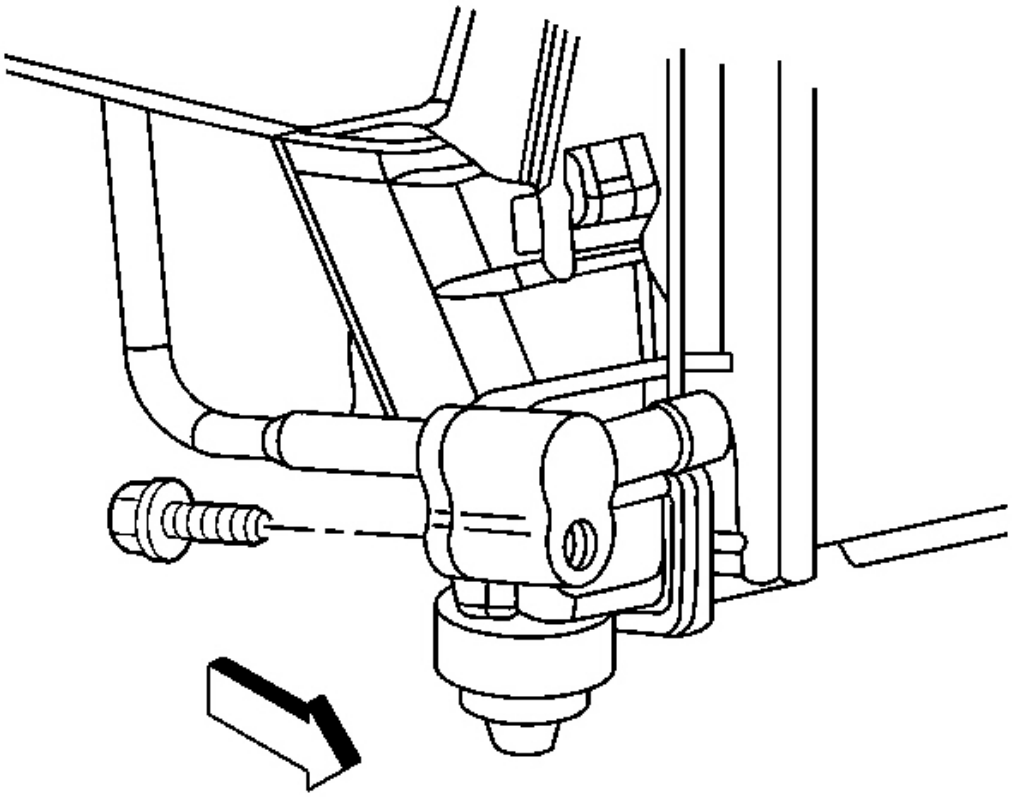

Fig. 77: Identifying Front Evaporator Inlet Line To A/C Condenser Lower Bolt
Courtesy of GENERAL MOTORS CORP.

9. Connect the front evaporator inlet line to the A/C condenser.

NOTE: Refer to Fastener Notice in Cautions and Notices.

10. Install the front evaporator inlet line bolt.

    Tighten: Tighten the bolt to 16 N.m (12 lb ft).

11. Lower the vehicle.
12. Remove the cap or tape from the A/C compressor hose assembly.

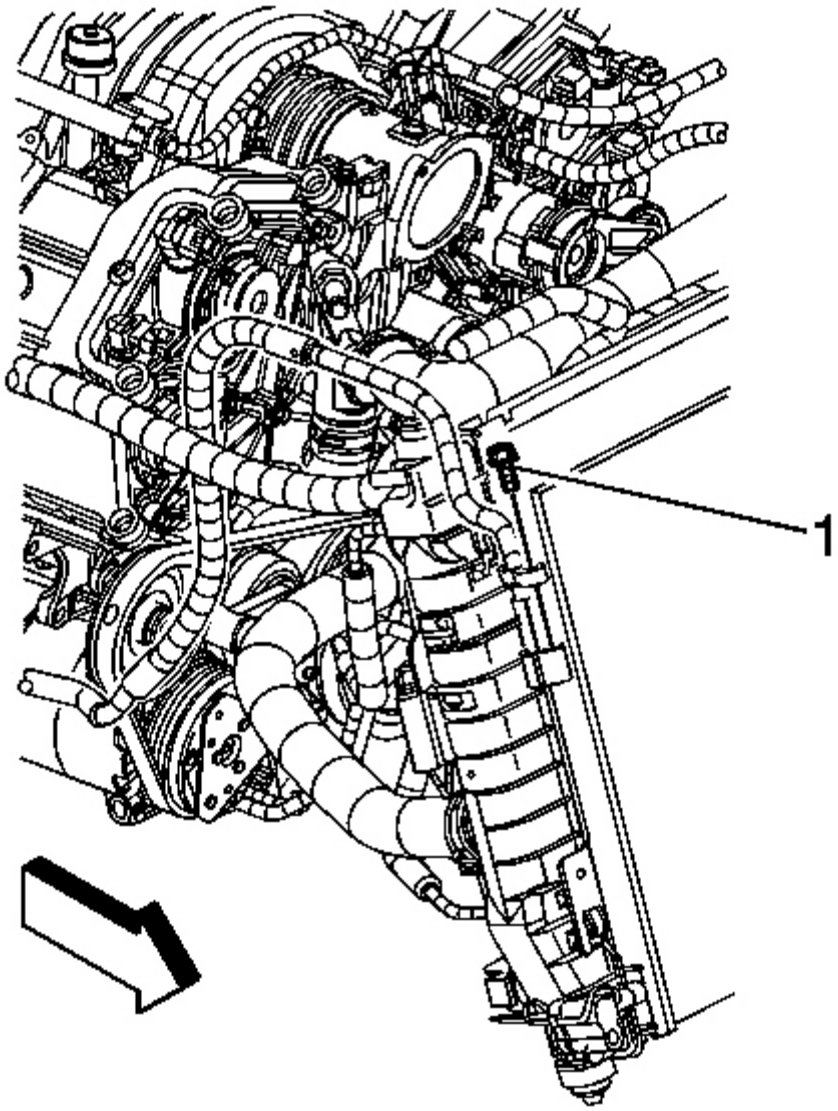

Fig. 78: Identifying A/C Compressor Hose Assembly Bolt & A/C Condenser Fitting
Courtesy of GENERAL MOTORS CORP.

13. Install a new seal washer to the A/C compressor hose assembly. Refer to **Sealing Washer Replacement**.
14. Connect the A/C compressor hose assembly to the A/C condenser.

15. Install the A/C compressor hose assembly to A/C condenser bolt (1).

    Tighten: Tighten the bolt to 16 N.m (12 lb ft).

16. Install the upper radiator support. Refer to **Radiator Support Replacement** in Engine Cooling.
17. Evacuate and recharge the A/C system. Refer to **Refrigerant Recovery and Recharging**.
18. Leak test the fittings of the component using **J 39400-A** .

HVAC MODULE ASSEMBLY REPLACEMENT

Tools Required

J 39400-A Halogen Leak Detector

Removal Procedure

1. Recover the refrigerant from the A/C system. Refer to **Refrigerant Recovery and Recharging**.
2. Drain the cooling system. Refer to **Draining and Filling Cooling System** in Engine Cooling.
3. Remove the heater pipe assembly. Refer to **Heater Pipes Replacement**.
4. Remove the engine wire harness bracket bolt.
5. Disconnect engine wire harness electrical connector and reposition aside.

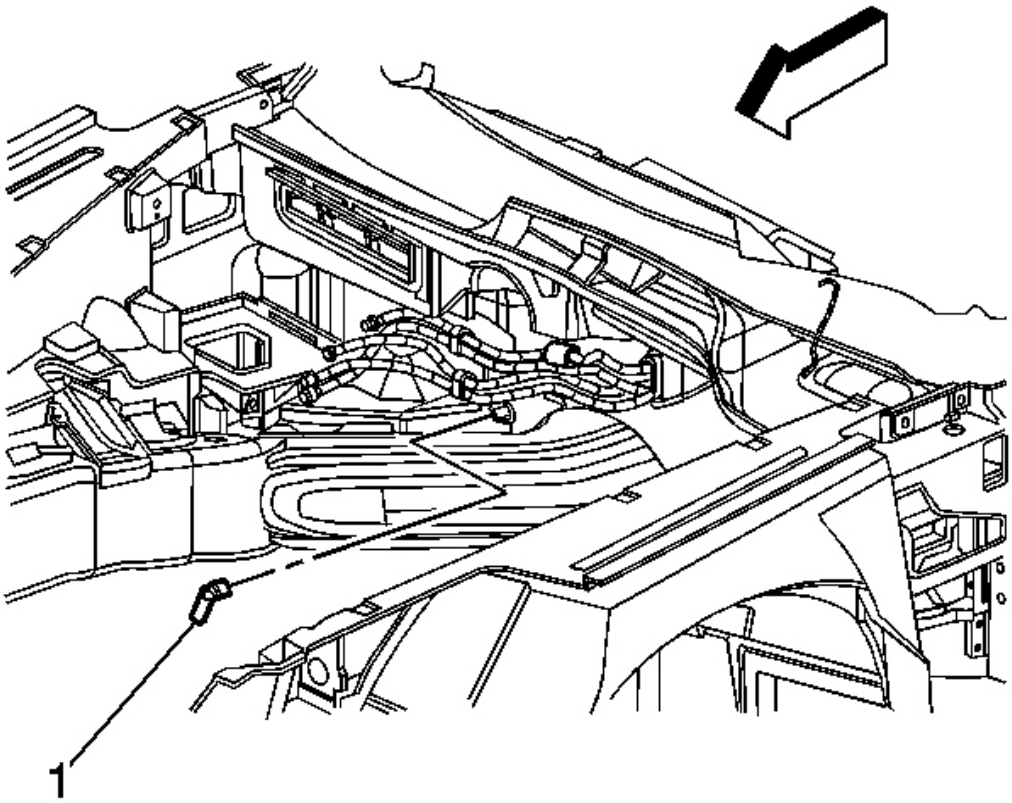

Fig. 79: Identifying Evaporator Drain Tube At HVAC Module
Courtesy of GENERAL MOTORS CORP.

6. Remove the evaporator drain tube (1) from the HVAC module.
7. Remove the I/P assembly. Refer to **Instrument Panel (I/P) Carrier Replacement** in Instrument Panel, Gages and Console.

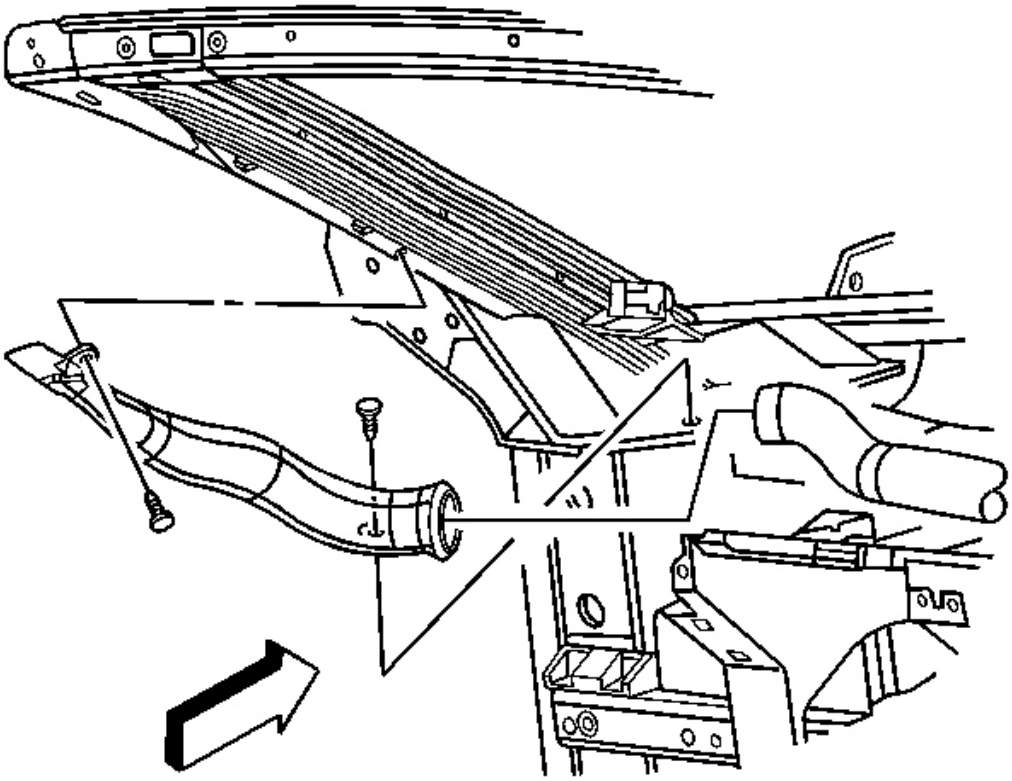

Fig. 80: Defogger Duct & Components
Courtesy of GENERAL MOTORS CORP.

8. Remove the retainers from the upper defogger duct on the left side window.
9. Disconnect and remove the upper defogger outlet duct.

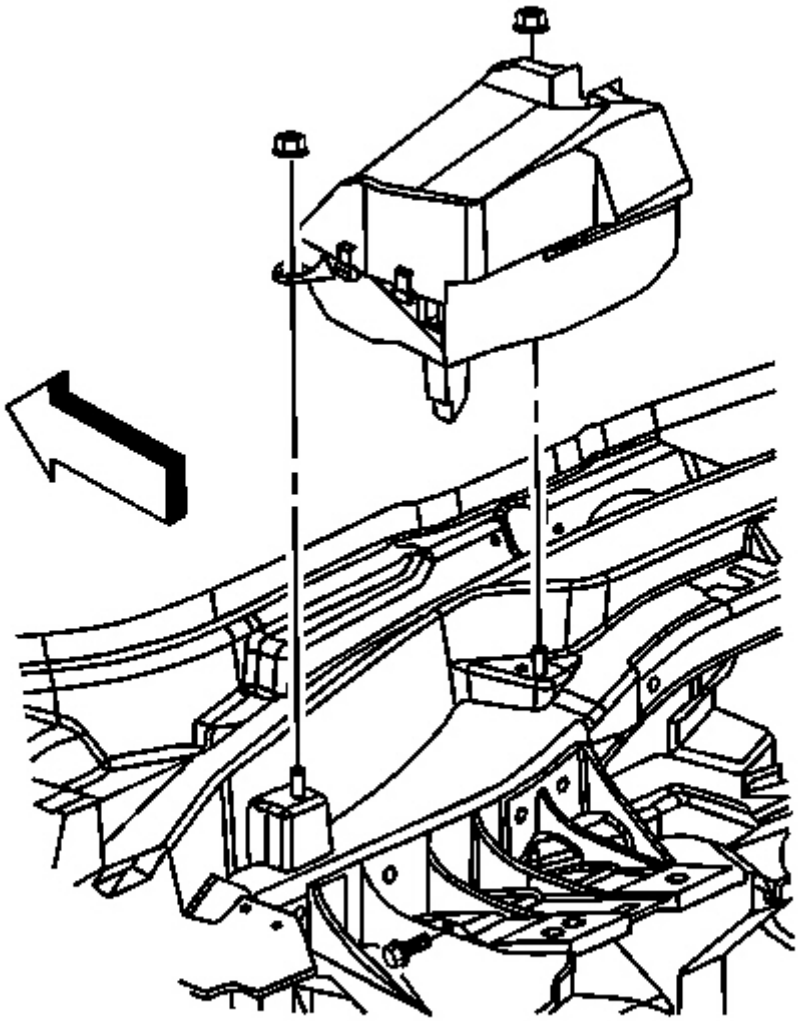

Fig. 81: View Of HUD
Courtesy of GENERAL MOTORS CORP.

10. Disconnect the HUD electrical connector.
11. Remove the HUD retaining nuts.
12. Remove the screw that secures the HUD to the steering column bracket.

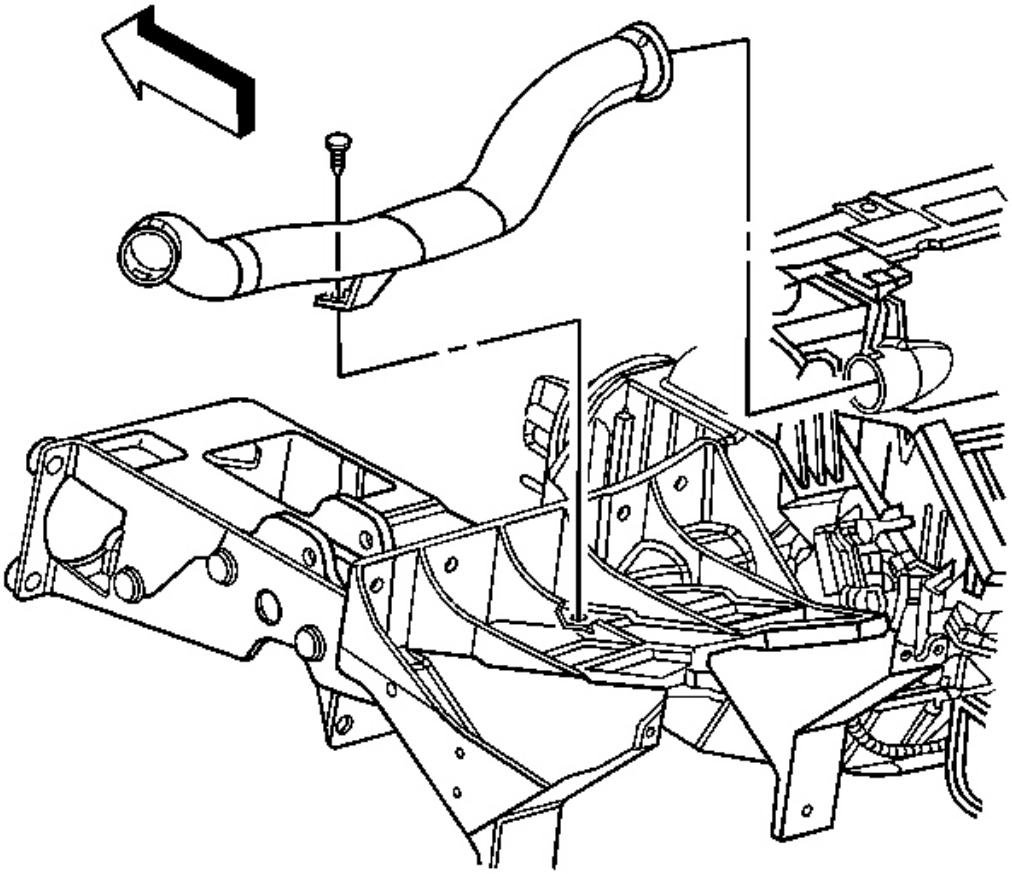

Fig. 82: Identifying Lower Defogger Outlet Duct & Retainer
Courtesy of GENERAL MOTORS CORP.

13. Remove the retainer from the lower defogger outlet duct.
14. Disconnect and remove the outlet duct from the defroster duct.

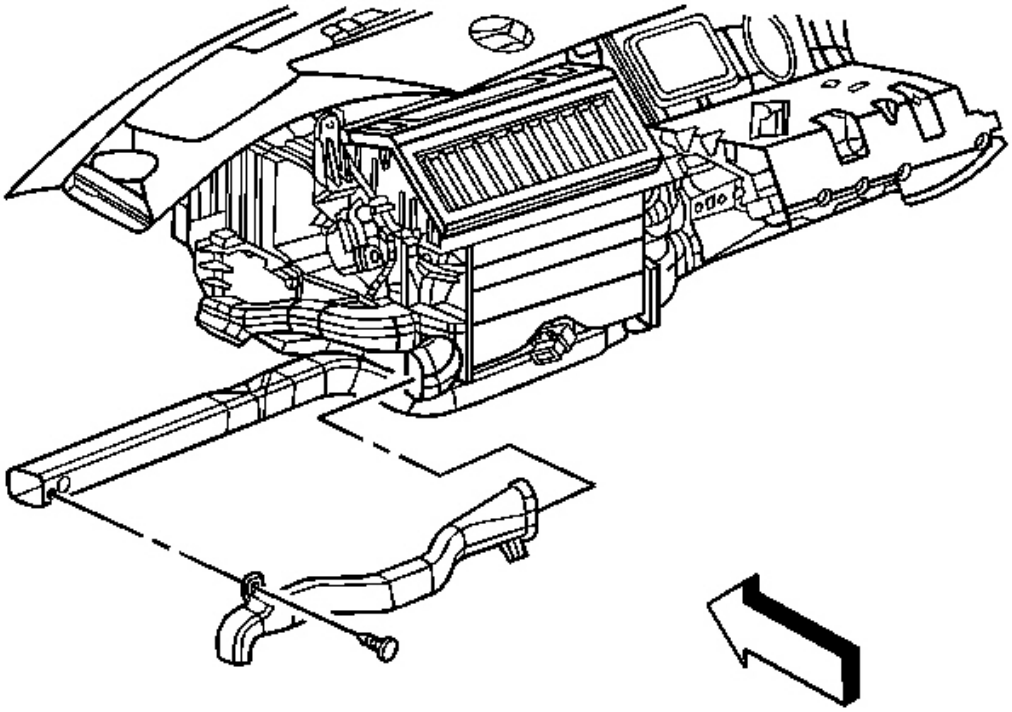

Fig. 83: Identifying Floor Air Outlet Duct & Retainer At I/P Beam
Courtesy of GENERAL MOTORS CORP.

15. Remove the retainer securing the floor air outlet duct to the lower I/P beam.
16. Disconnect the floor air outlet duct from the rear floor air outlet duct.
17. Remove the floor air outlet duct.

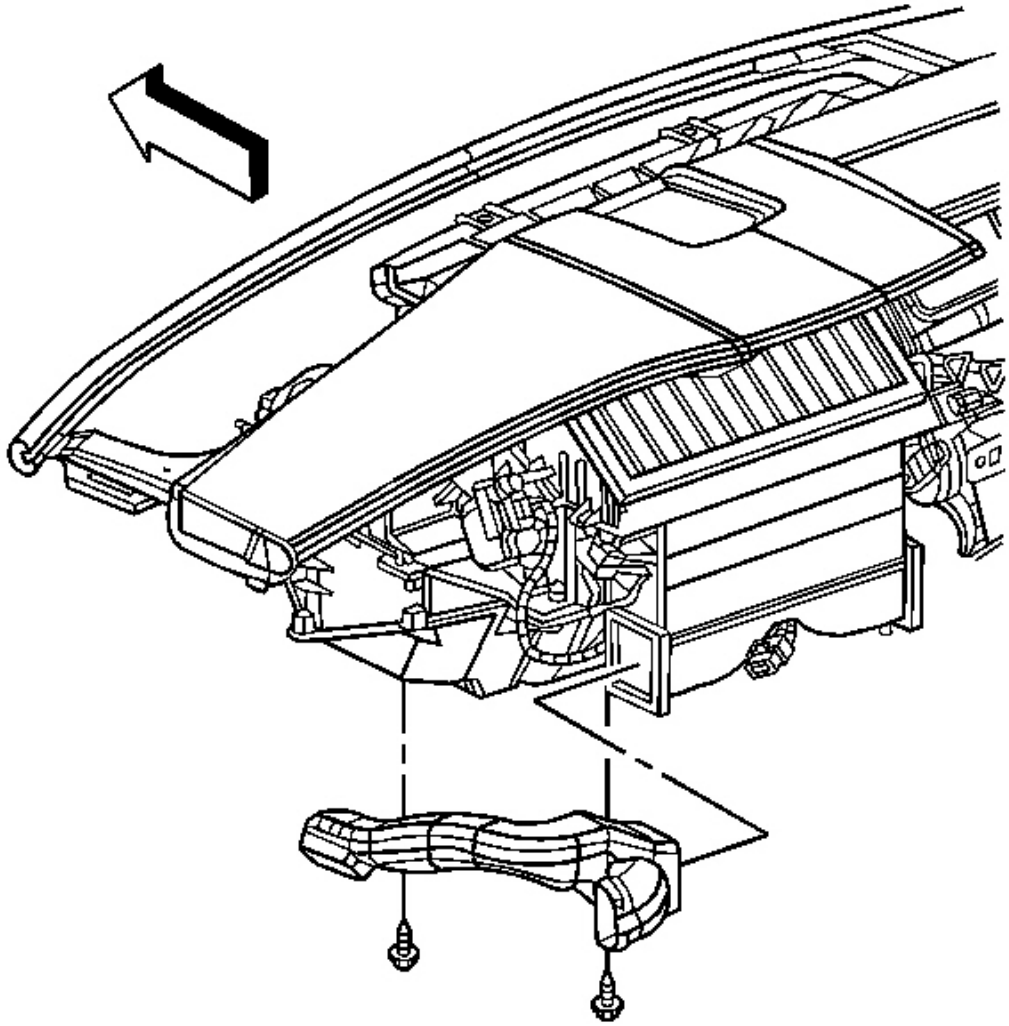

Fig. 84: Floor Air Outlet Duct & Retaining Screws
Courtesy of GENERAL MOTORS CORP.

18. Remove the retaining screws from the floor air outlet duct.
19. Remove the outlet duct.

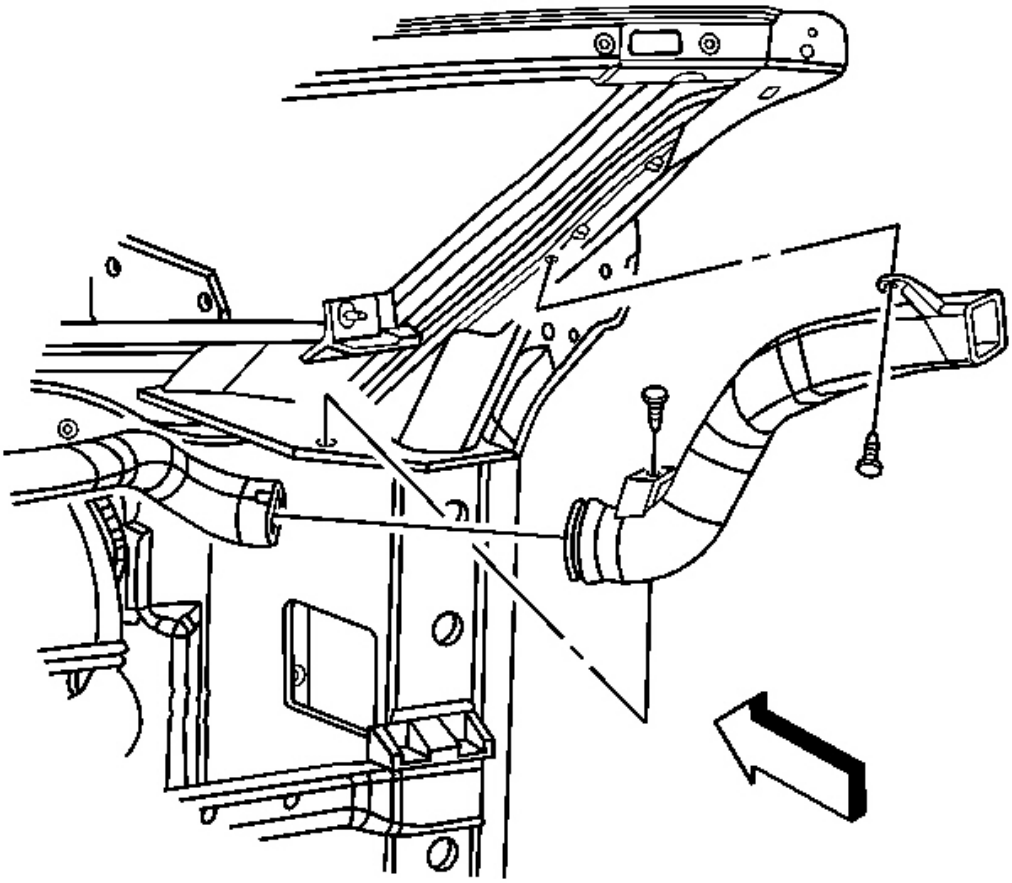

Fig. 85: Defogger Outlet Ducts & Retainers
Courtesy of GENERAL MOTORS CORP.

20. Remove the retainers from the upper outlet duct on the right side window defogger.
21. Disconnect and remove the defogger upper outlet duct from the defogger lower outlet duct.

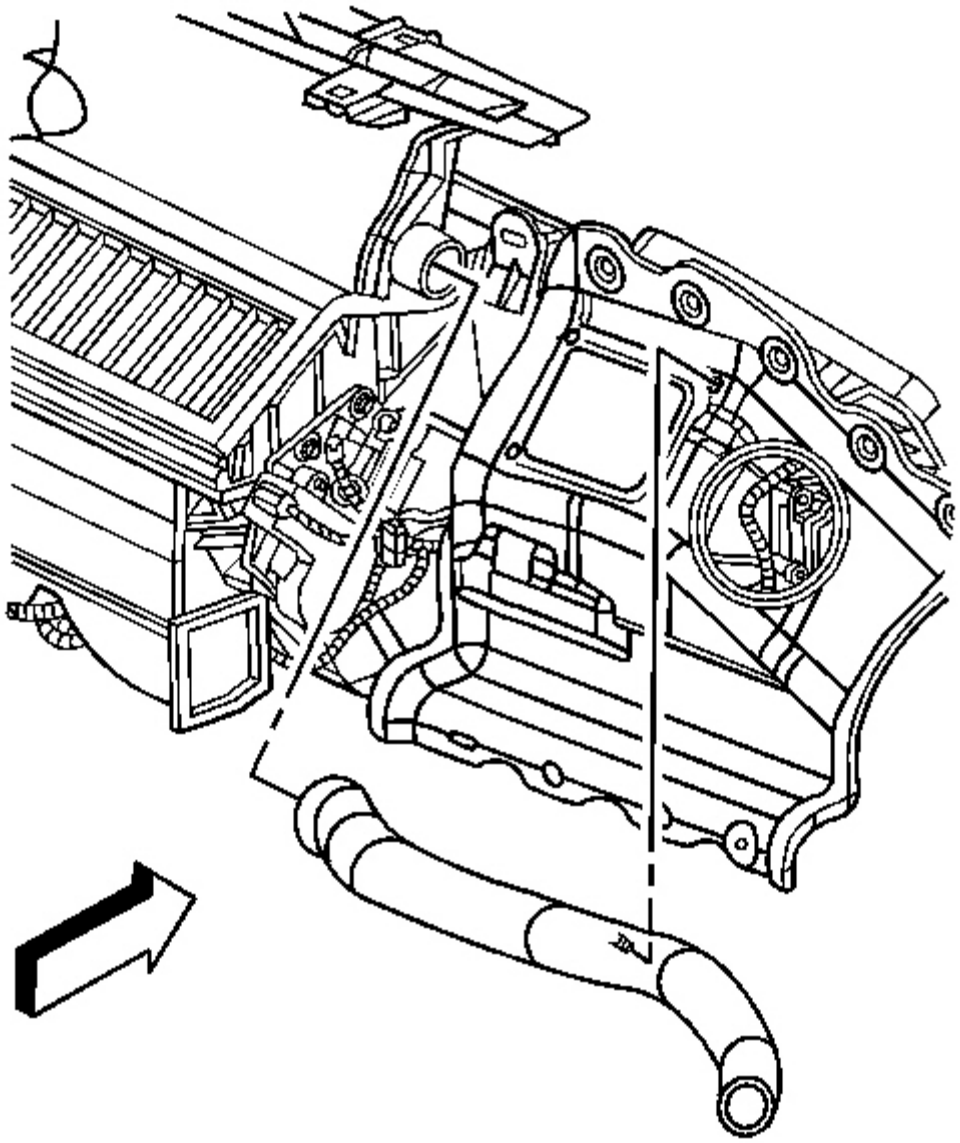

Fig. 86: Identifying Defogger Lower Outlet Duct
Courtesy of GENERAL MOTORS CORP.

22. Disconnect the defogger lower outlet duct from the knee bolster bracket.
23. Disconnect the defogger lower outlet duct from the defroster duct.
24. Remove the defogger lower outlet duct.

25. Remove the knee bolster bracket. Refer to **Knee Bolster Bracket Replacement - Right** in Instrument Panel, Gages and Console.

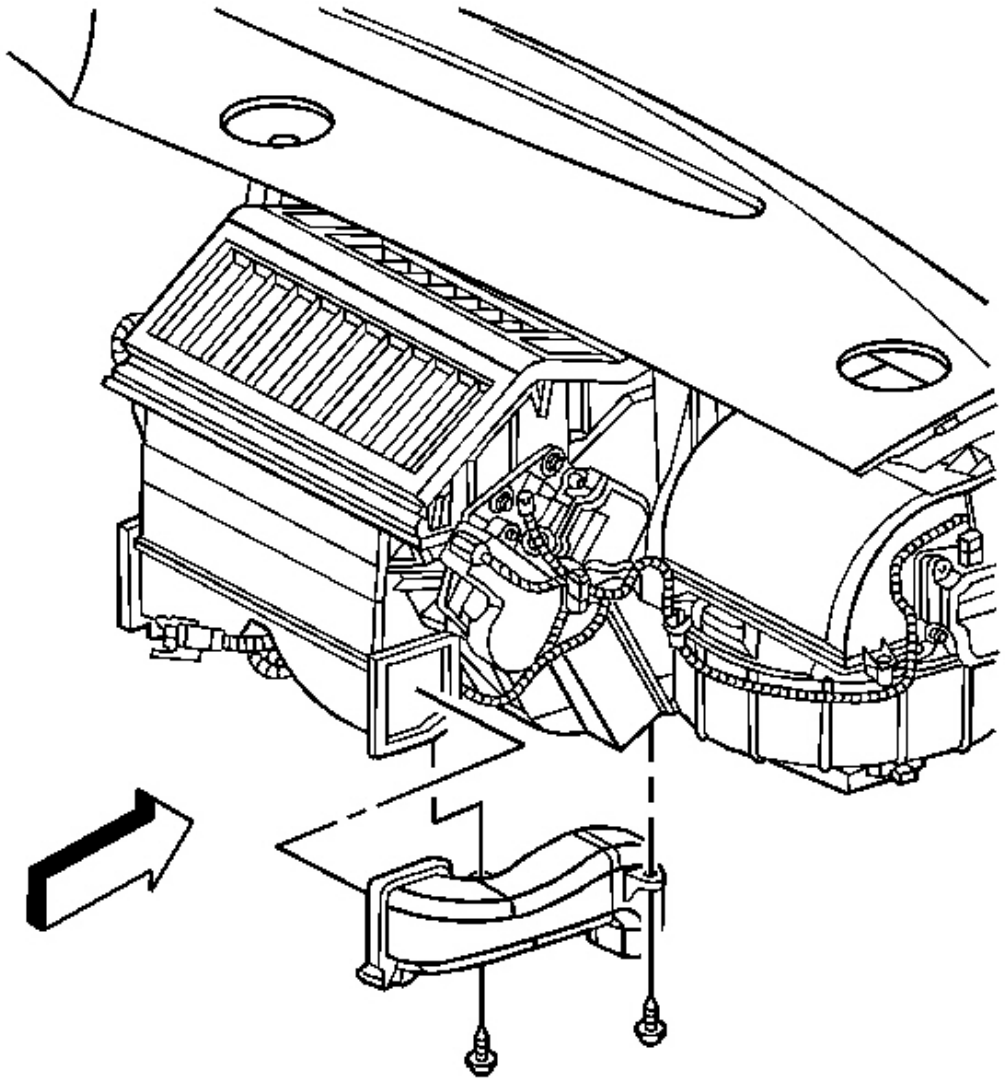

Fig. 87: Air Outlet Duct & Retaining Screws
Courtesy of GENERAL MOTORS CORP.

26. Remove the retaining screws from the floor air outlet duct.
27. Remove the air outlet duct.

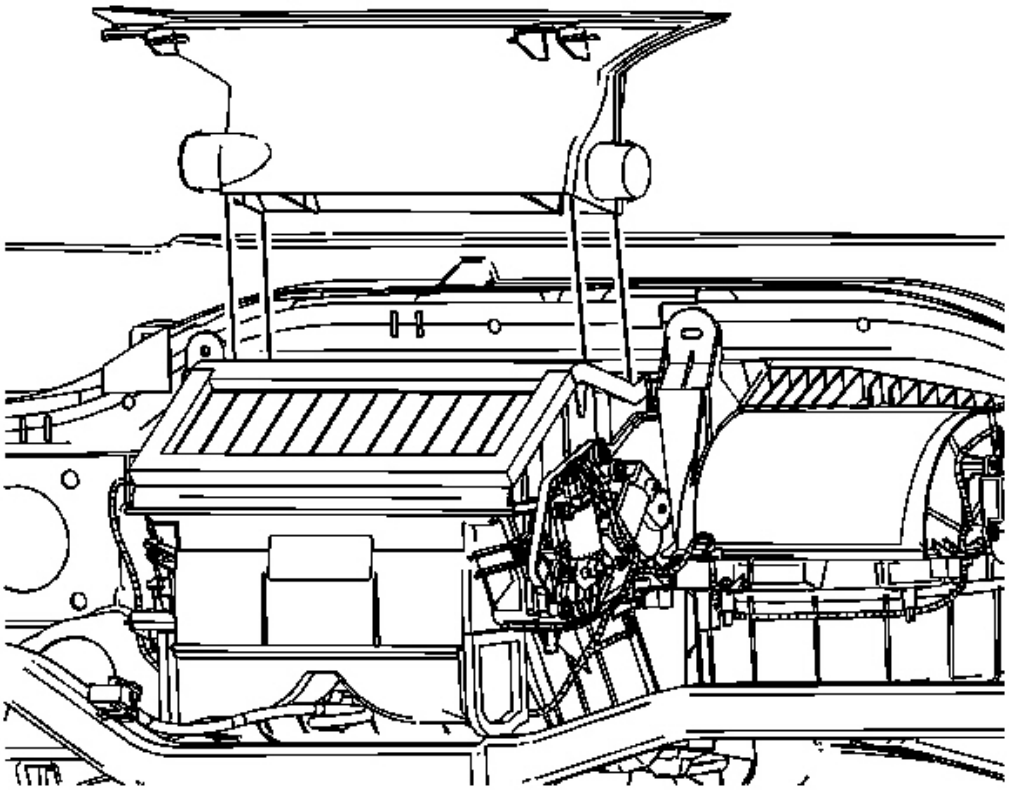

Fig. 88: Defroster Duct
Courtesy of GENERAL MOTORS CORP.

28. Remove the defroster duct retaining screws.
29. Remove the defroster duct.
30. Disconnect the blower motor electrical connector.

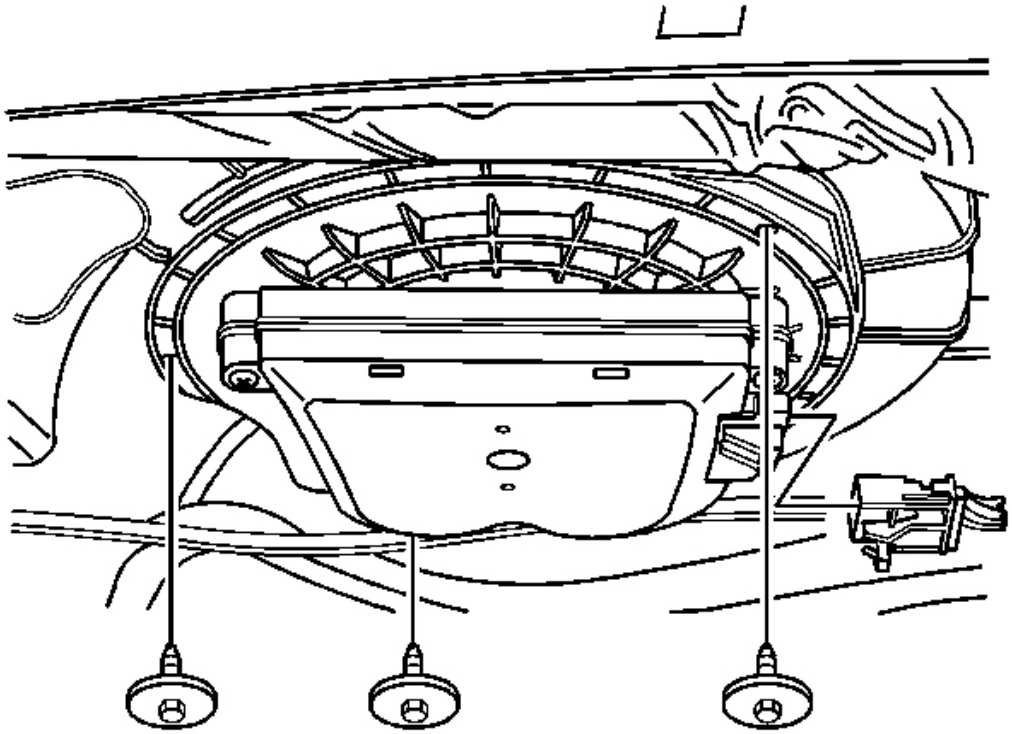

Fig. 89: Blower Motor & Retaining Screws At HVAC Module
Courtesy of GENERAL MOTORS CORP.

31. Remove the blower motor retaining screws.
32. Remove the blower motor from the HVAC module.

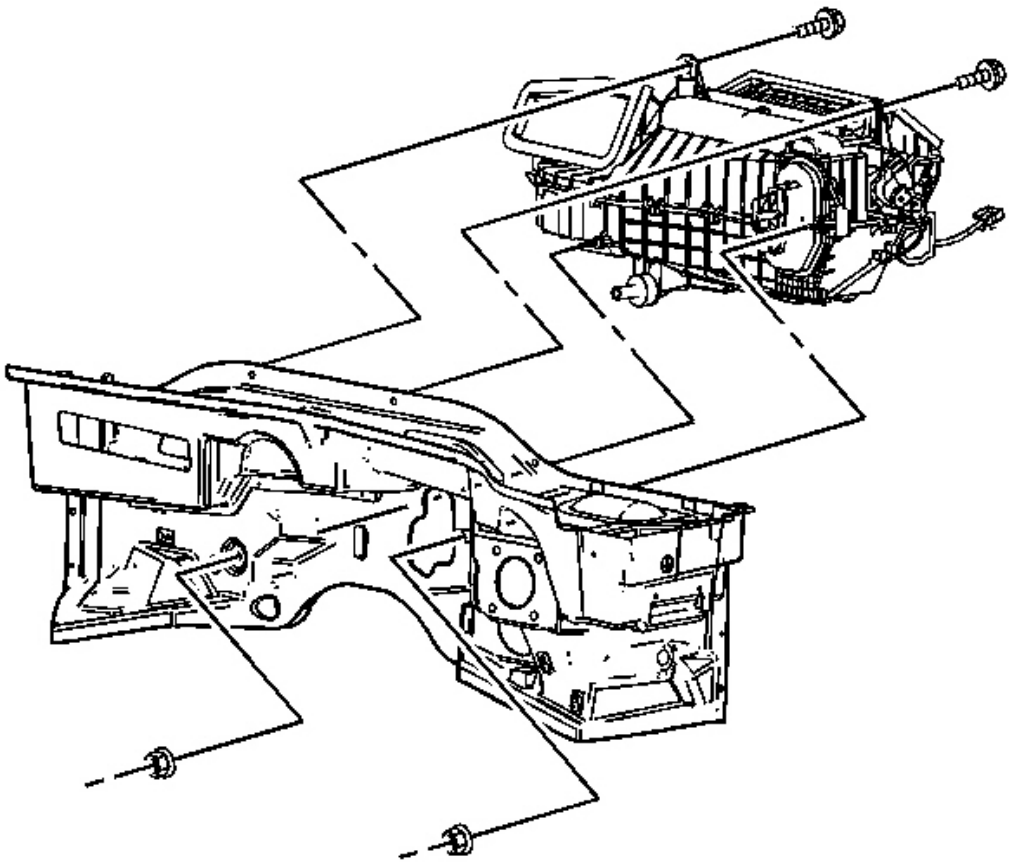

Fig. 90: HVAC Module, I/P Cross Vehicle Beam & Components
Courtesy of GENERAL MOTORS CORP.

33. Remove the retaining and sealing nuts from the cowl.
34. Remove the retaining bolts from the upper I/P cross vehicle beam.
35. Completely loosen the studs on the HVAC module.

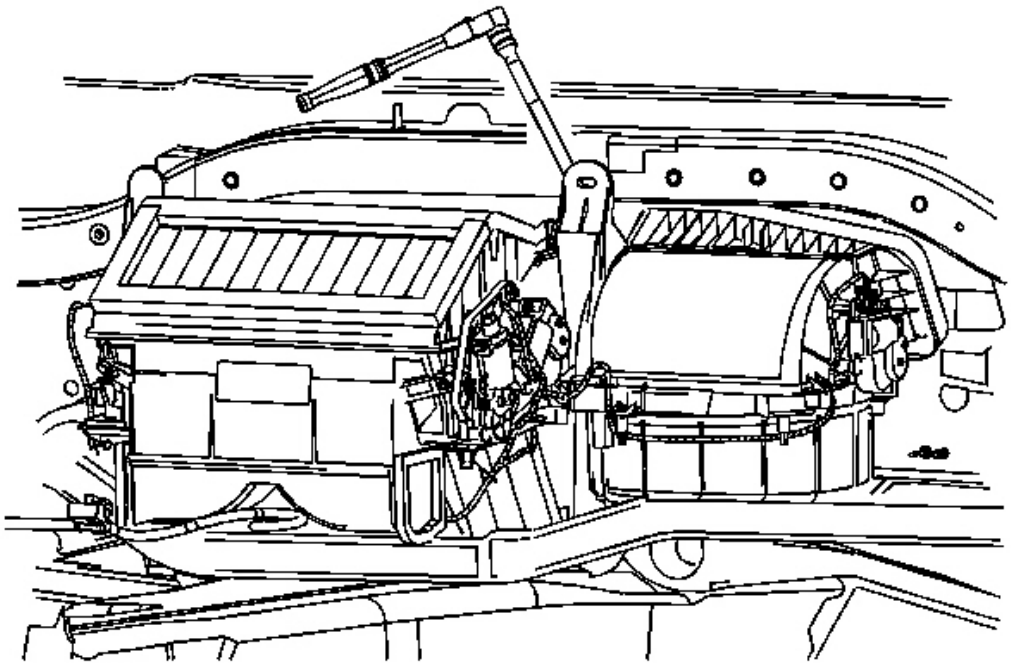

Fig. 91: Identifying Front LH Recirculation Housing Retaining Screw
Courtesy of GENERAL MOTORS CORP.

IMPORTANT: Reposition the HVAC module rearward to access the front LH screw.
The front LH retaining tab of the recirculation housing is slotted.

36. Loosen the front LH recirculation housing retaining screw.

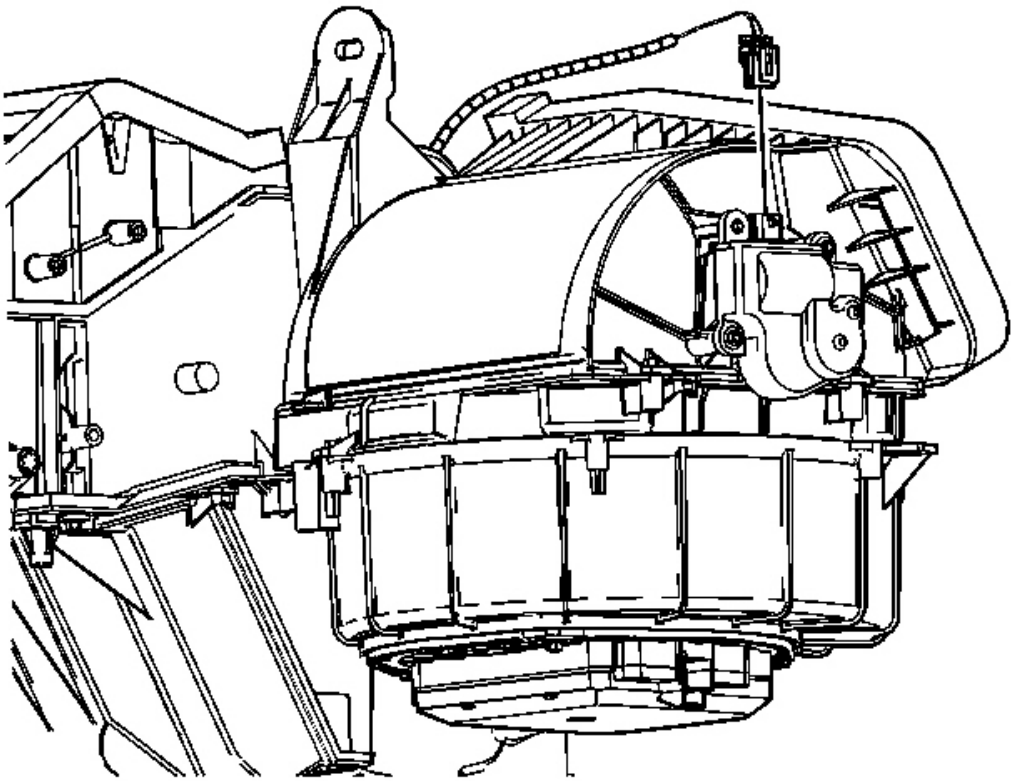

Fig. 92: Identifying Actuator Electrical Connector
Courtesy of GENERAL MOTORS CORP.

37. Disconnect the recirculation actuator electrical connector.
38. Disconnect the HVAC module wiring harness from the recirculation housing.

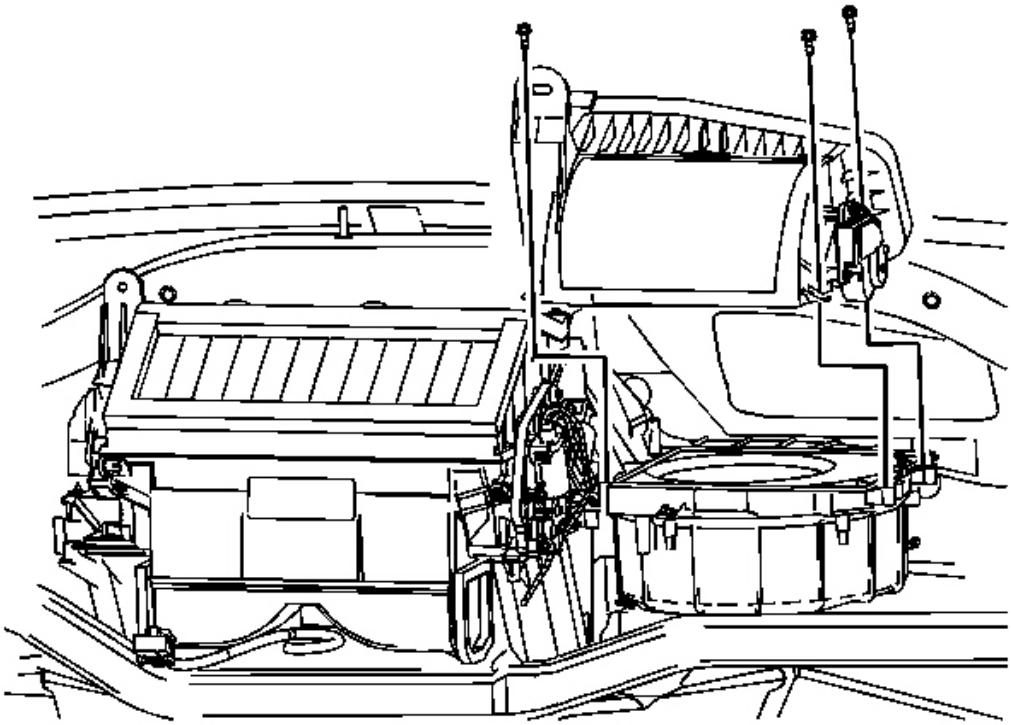

Fig. 93: Identifying Recirculation Housing Retaining Screws
Courtesy of GENERAL MOTORS CORP.

39. Remove the remaining recirculation housing retaining screws.
40. Remove the recirculation housing from the HVAC module.

IMPORTANT: Reposition the center console wiring harness that runs beneath the HVAC module to aide in HVAC module removal.

41. Reposition the center console wiring harness and the corresponding electrical connectors to the sides of the HVAC module and forward of the lower tie bar.

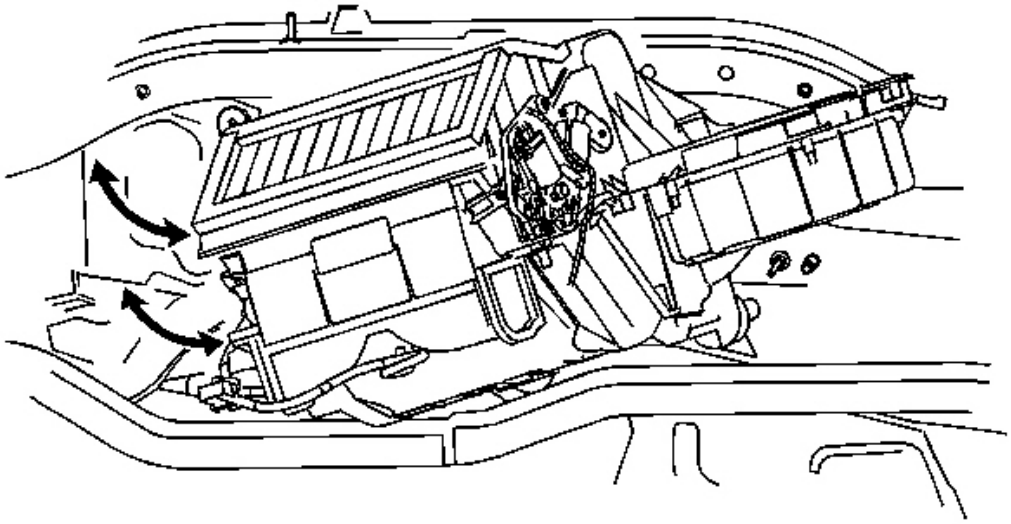

Fig. 94: Identifying HVAC Module
Courtesy of GENERAL MOTORS CORP.

42. Carefully remove the HVAC module from the vehicle.

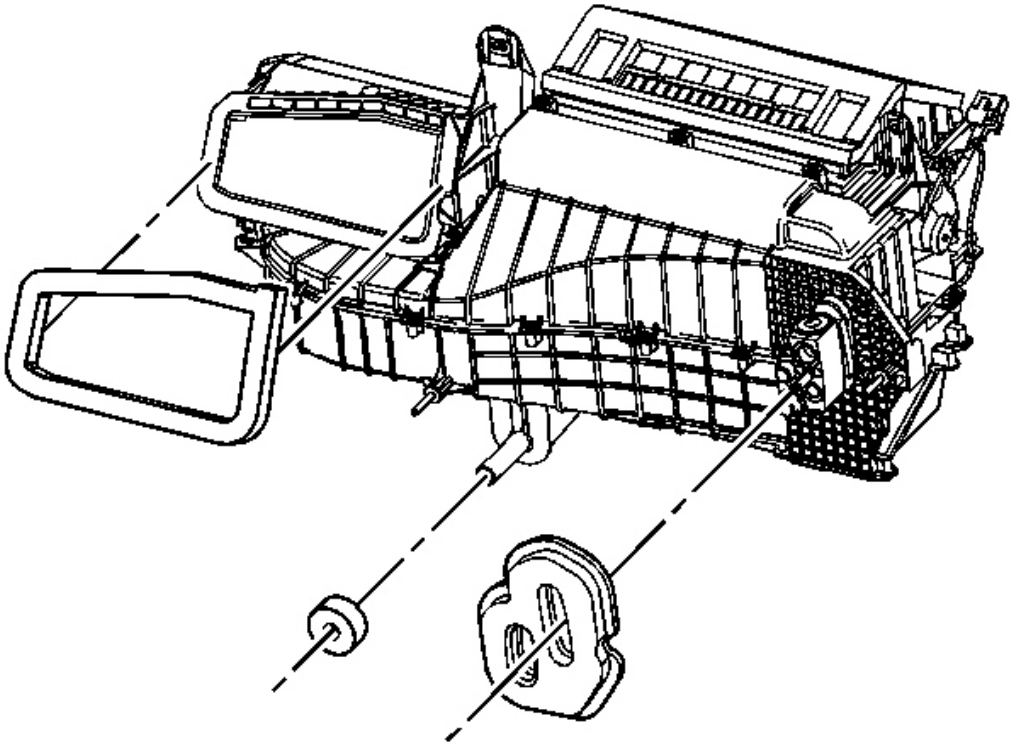

Fig. 95: Identifying Air Inlet, Drain & Plumbing Seals in HVAC Module
Courtesy of GENERAL MOTORS CORP.

43. Remove and discard the air inlet, drain and plumbing seals from the HVAC module.

Installation Procedure

1. If a new HVAC module is being installed, add the specified amount of PAG oil to the evaporator core. Refer to **Refrigerant System Capacities**.

   NOTE: Refer to Fastener Notice in Cautions and Notices.

2. Install the HVAC module studs.

   Tighten: Tighten the studs to 4 N.m (35 lb in).

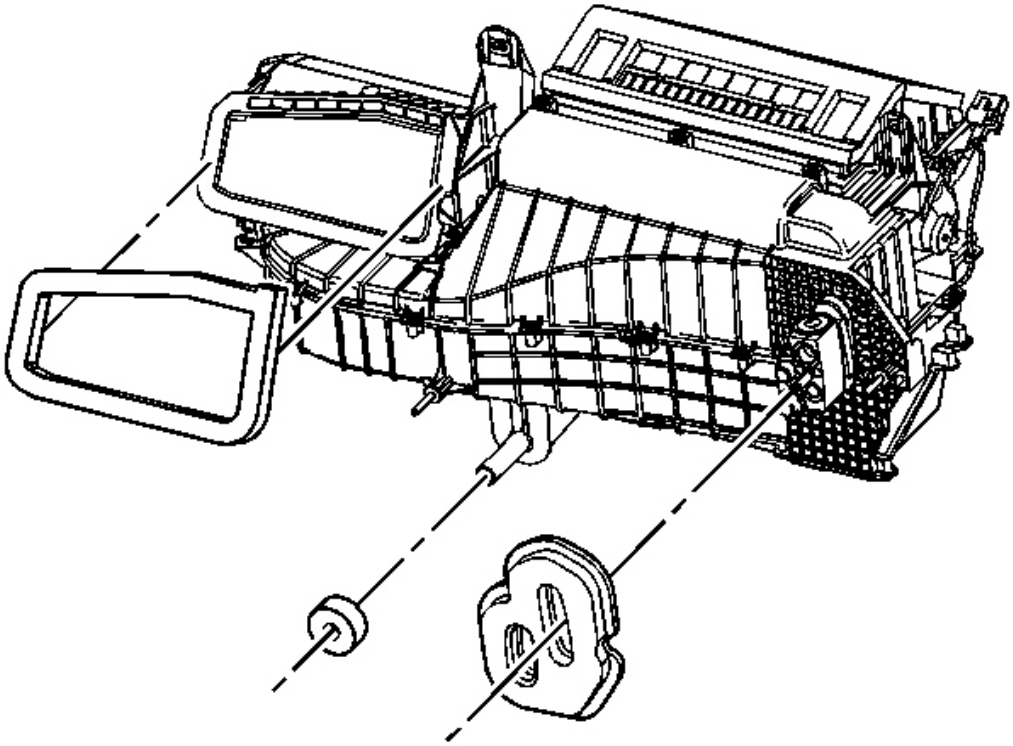

Fig. 96: Identifying Air Inlet, Drain & Plumbing Seals in HVAC Module
Courtesy of GENERAL MOTORS CORP.

3. Install new air inlet, drain and plumbing seals to the HVAC module.

IMPORTANT: Ensure that the cut-outs on the dash-mat are properly aligned so that the drain and plumbing seals are seated directly against the cowl and the air inlet seal is seated directly against the dash-mat.
The opening in the dash-mat for the HVAC module drain should be aligned so that the drain opening in the cowl is approximately centered in the dash-mat opening; allowing ample room for the module drain seal to fully seat against the cowl.

4. Inspect the dash-mat for proper alignment to the cowl. Align if necessary.

IMPORTANT: Spray a light coat of 3M™ P/N 08877 Silicone Lubricant Plus or equivalent onto the HVAC module heater cover to aid in the installation process.

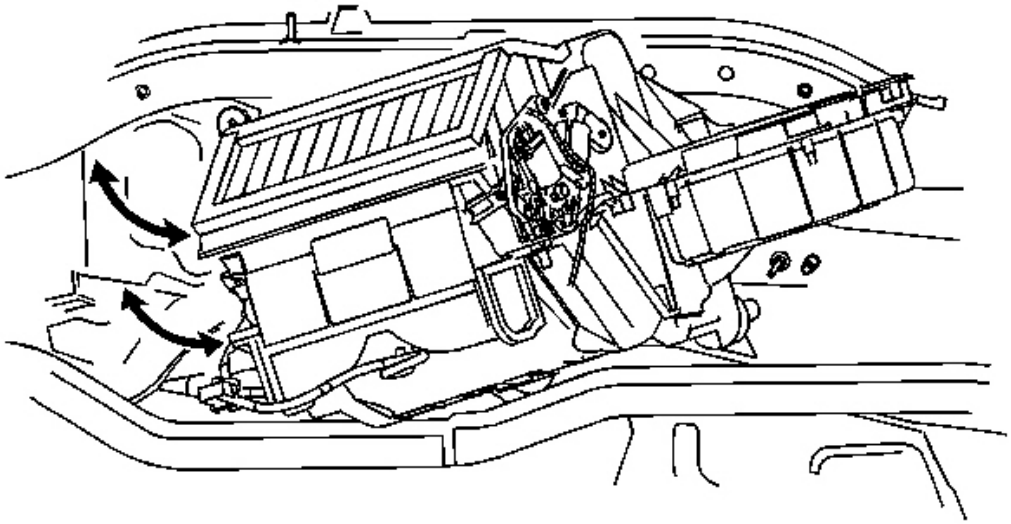

Fig. 97: Identifying HVAC Module
Courtesy of GENERAL MOTORS CORP.

NOTE: Do not force the HVAC module between upper I/P and lower I/P cross vehicle beams. Damage to the HVAC module can result.

5. Install the HVAC module into the vehicle.
6. Reposition the center console wire harness and the corresponding electrical connectors rearward of the lower tie bar.
7. Install the recirculation housing to the HVAC module.

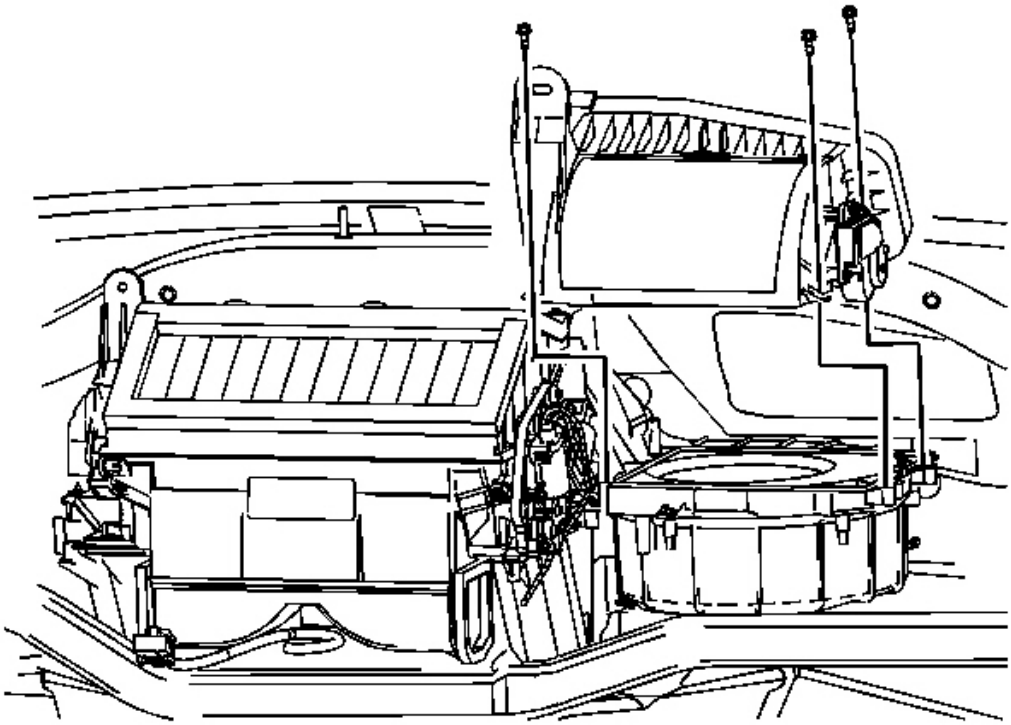

Fig. 98: Identifying Recirculation Housing Retaining Screws
Courtesy of GENERAL MOTORS CORP.

8. Install the recirculation housing retaining screws.

   Tighten: Tighten the screws to 1.6 N.m (14 lb in).

9. Connect the HVAC module wiring harness to the recirculation housing.

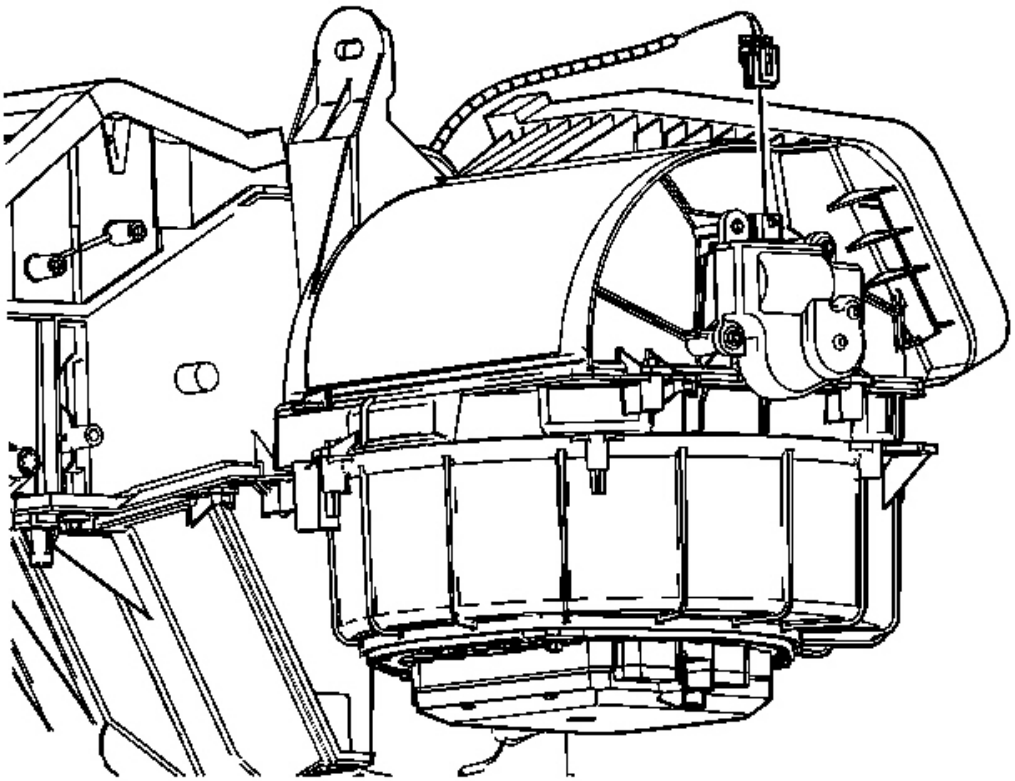

Fig. 99: Identifying Actuator Electrical Connector
Courtesy of GENERAL MOTORS CORP.

10. Connect the recirculation actuator electrical connector.

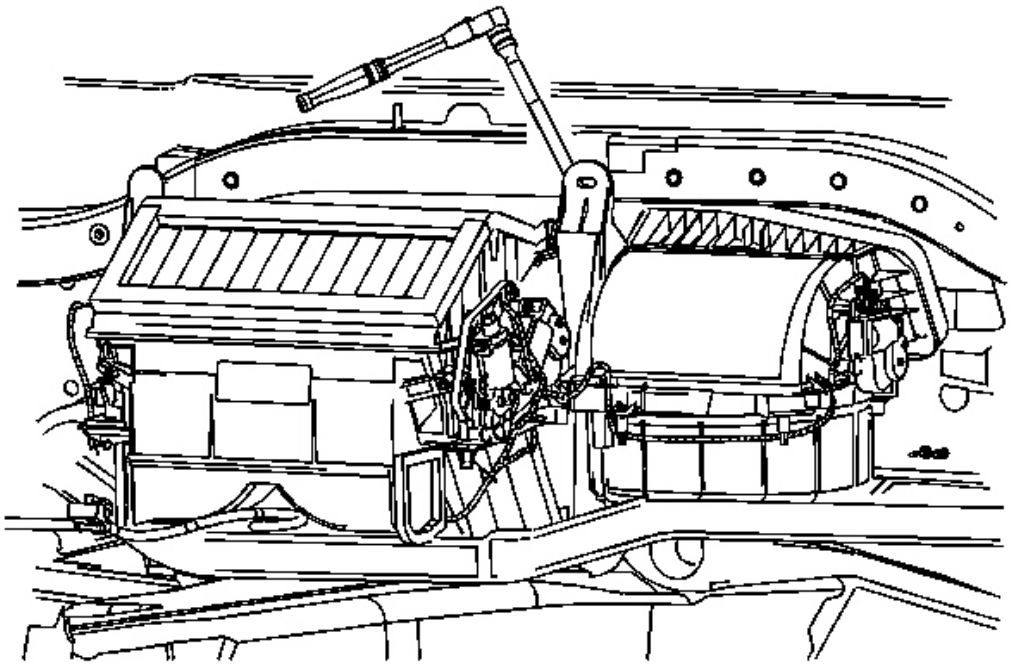

Fig. 100: Identifying Front LH Recirculation Housing Retaining Screw
Courtesy of GENERAL MOTORS CORP.

11. Tighten the front LH recirculation housing retaining screw.

    Tighten: Tighten the screw to 1.6 N.m (14 lb in).

IMPORTANT: If necessary, gently rotate the HVAC module forward to engage the HVAC module studs through the corresponding holes on the cowl.

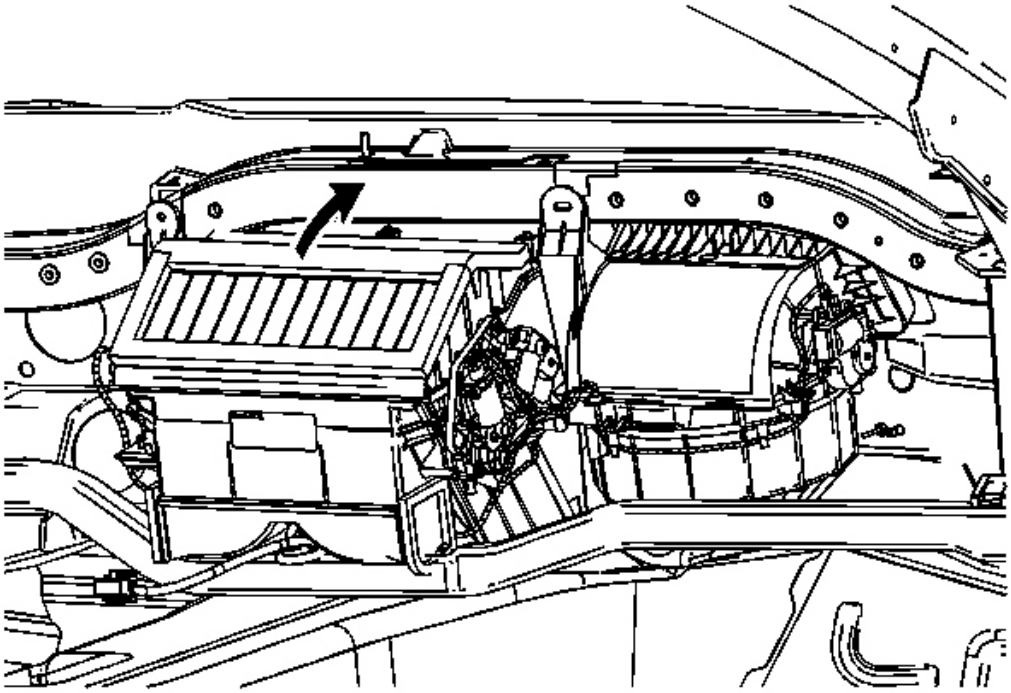

Fig. 101: Aligning Components To Corresponding Openings On The Cowl
Courtesy of GENERAL MOTORS CORP.

12. Align the following components to the corresponding openings on the cowl:
    - The heater core block fitting
    - The evaporator block fitting
    - The HVAC module drain
    - The HVAC module studs

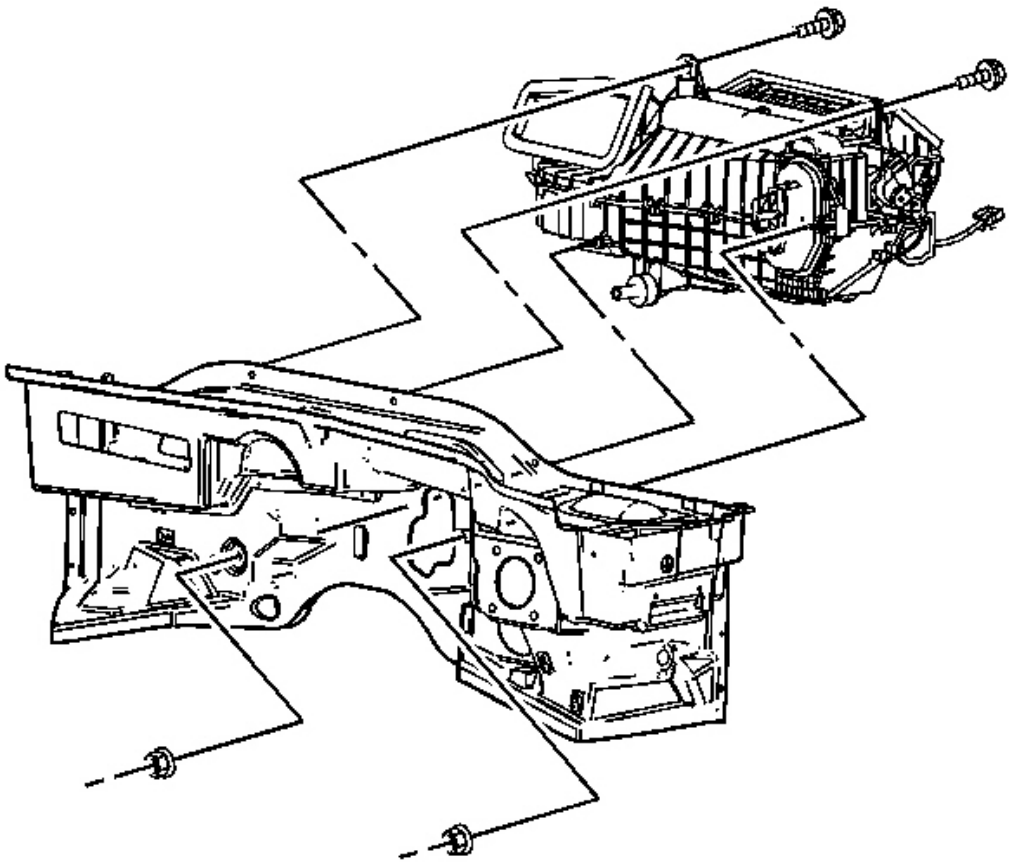

Fig. 102: HVAC Module, I/P Cross Vehicle Beam & Components
Courtesy of GENERAL MOTORS CORP.

13. Install the bolts retaining the HVAC module to the upper I/P cross vehicle beam.

    Tighten: Tighten the bolts to 5 N.m (44 lb in).

    IMPORTANT: To prevent possible water leaks or wind/road noise from entering the vehicle passenger compartment, do not reuse the old HVAC module retaining and sealing nuts.

14. Install new HVAC module retaining and sealing nuts.

    Tighten: Tighten the nuts to 10 N.m (89 lb in).

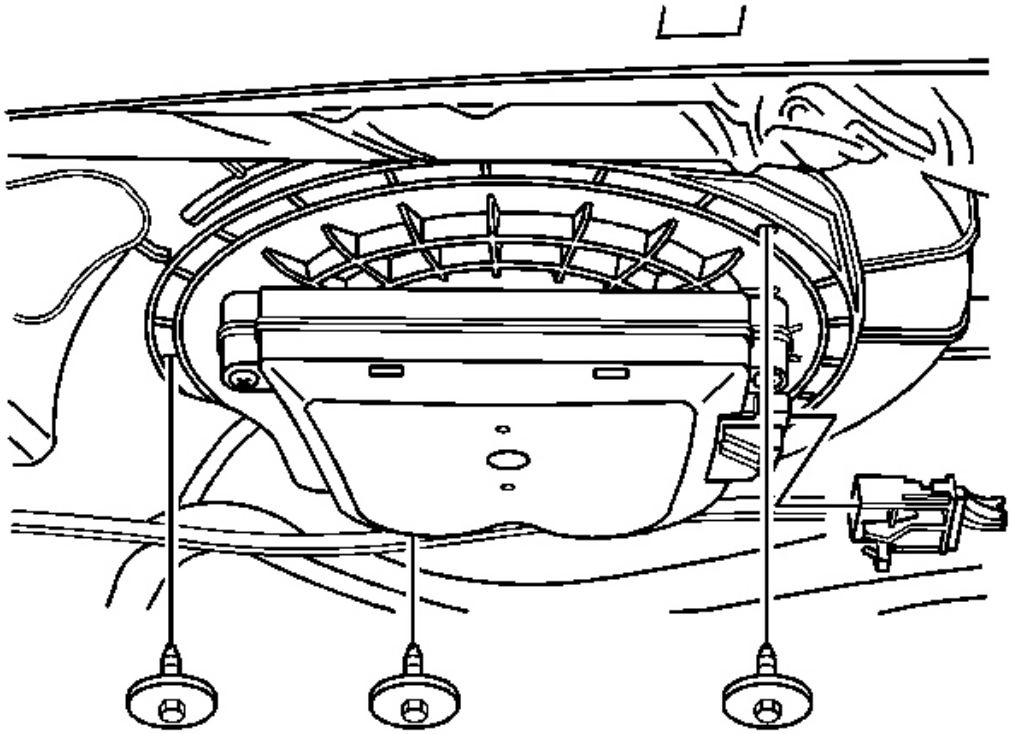

Fig. 103: Blower Motor & Retaining Screws At HVAC Module
Courtesy of GENERAL MOTORS CORP.

15. Install the blower motor to the HVAC module.
16. Install the blower motor retaining screws.

    Tighten: Tighten the screws to 1.6 N.m (14 lb in).

17. Connect the blower motor electrical connector.

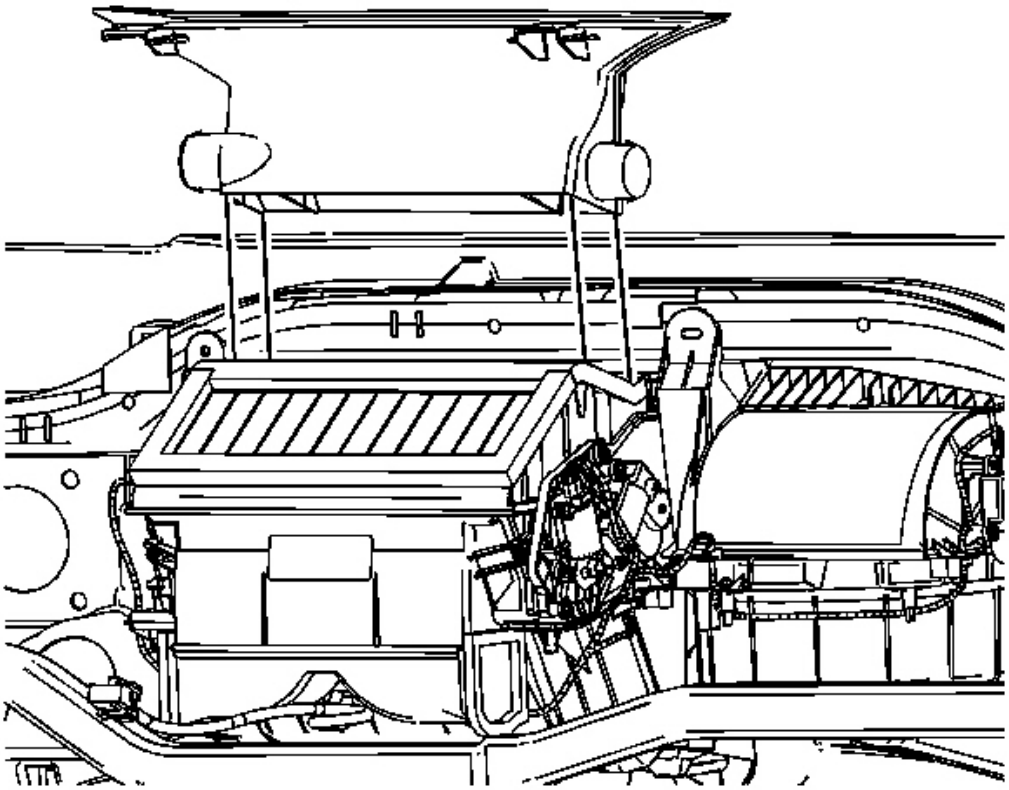

Fig. 104: Defroster Duct
Courtesy of GENERAL MOTORS CORP.

18. Install the defroster duct to the HVAC module.
19. Install the defroster duct retaining screws.

    Tighten: Tighten the screws to 10 N.m (89 lb in).

20. Install the right floor air outlet duct.

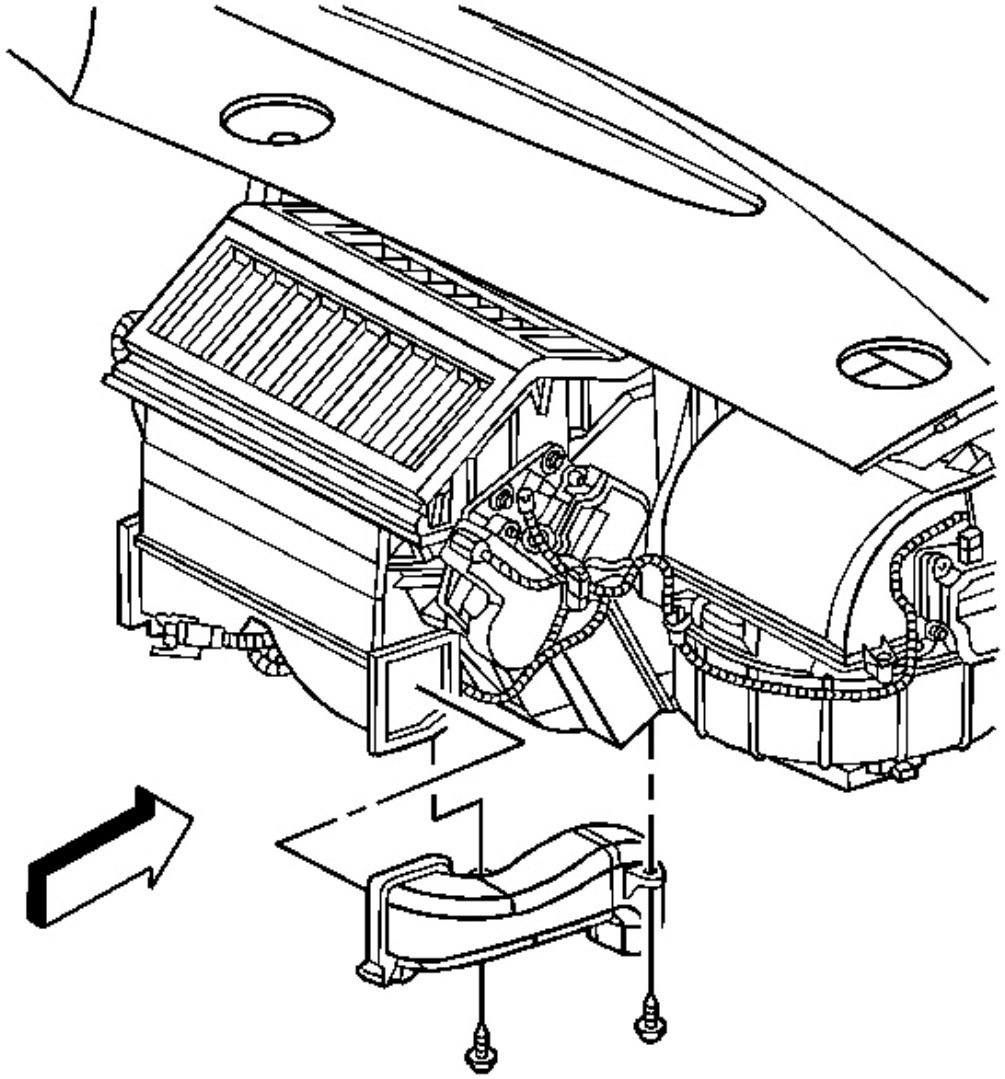

Fig. 105: Air Outlet Duct & Retaining Screws
Courtesy of GENERAL MOTORS CORP.

21. Install the floor air outlet duct retaining screws.

    Tighten: Tighten the screws to 1.6 N.m (14 lb in).

22. Install the knee bolster bracket. Refer to **Knee Bolster Bracket Replacement - Right** in

Instrument Panel, Gages and Console.

23. Install the lower outlet duct to the side window defogger.
24. Connect the lower outlet duct on the side window defogger to the defroster duct.

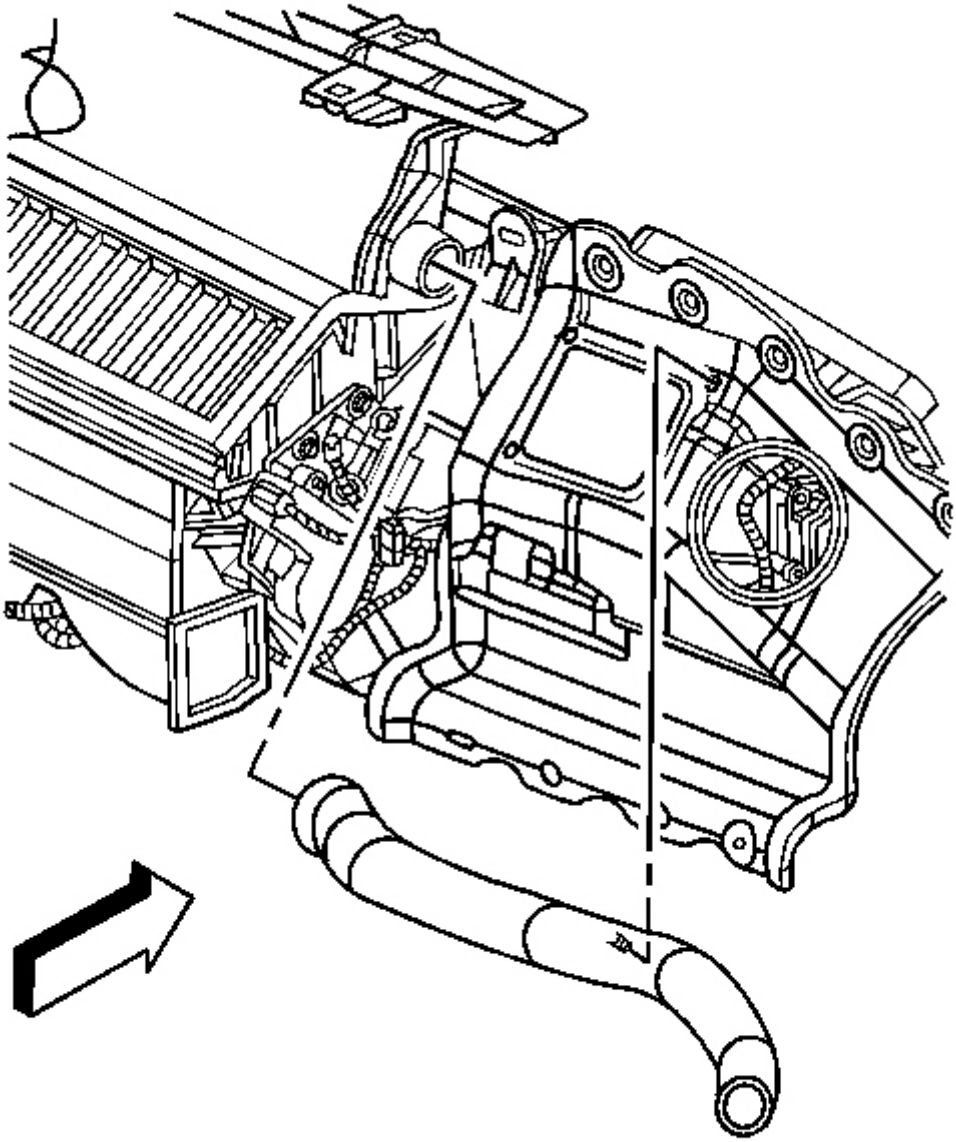

Fig. 106: Identifying Defogger Lower Outlet Duct
Courtesy of GENERAL MOTORS CORP.

25. Connect the defogger lower outlet duct to the knee bolster bracket.
26. Connect the defogger upper outlet duct to the defogger lower outlet duct.

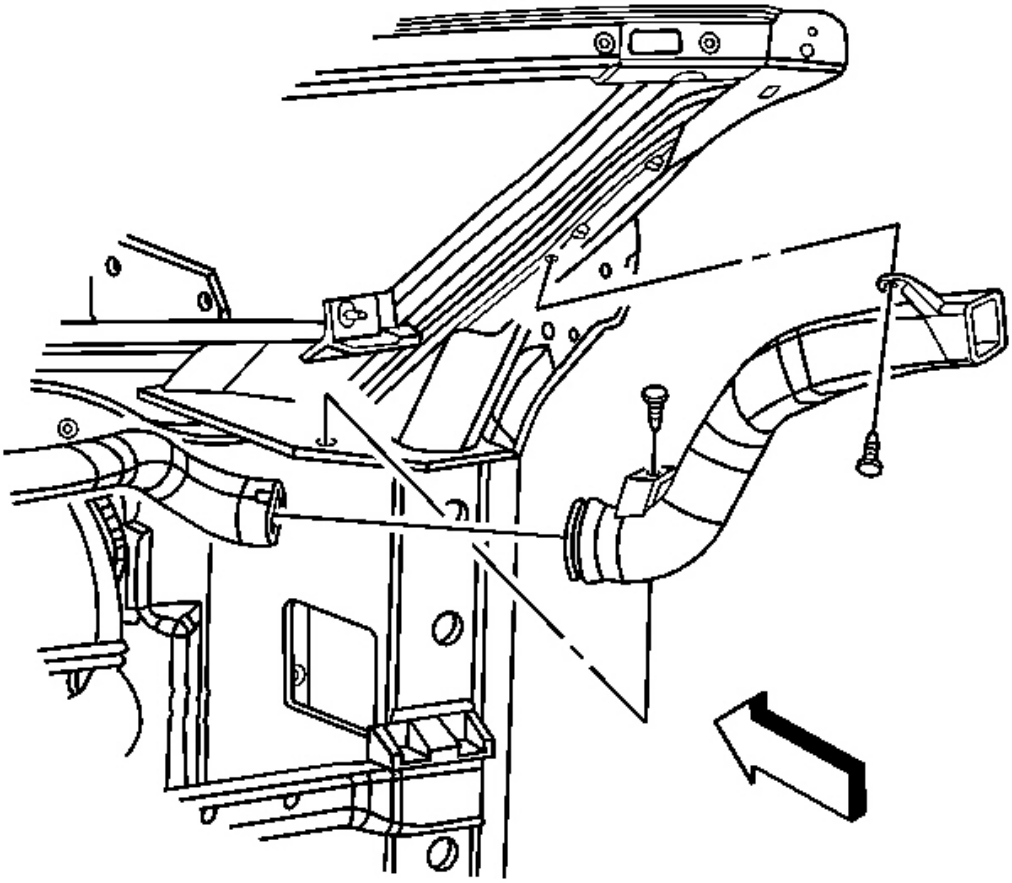

Fig. 107: Defogger Outlet Ducts & Retainers
Courtesy of GENERAL MOTORS CORP.

27. Install the retainers to the defogger upper outlet duct.
28. Install the left rear floor air outlet duct.

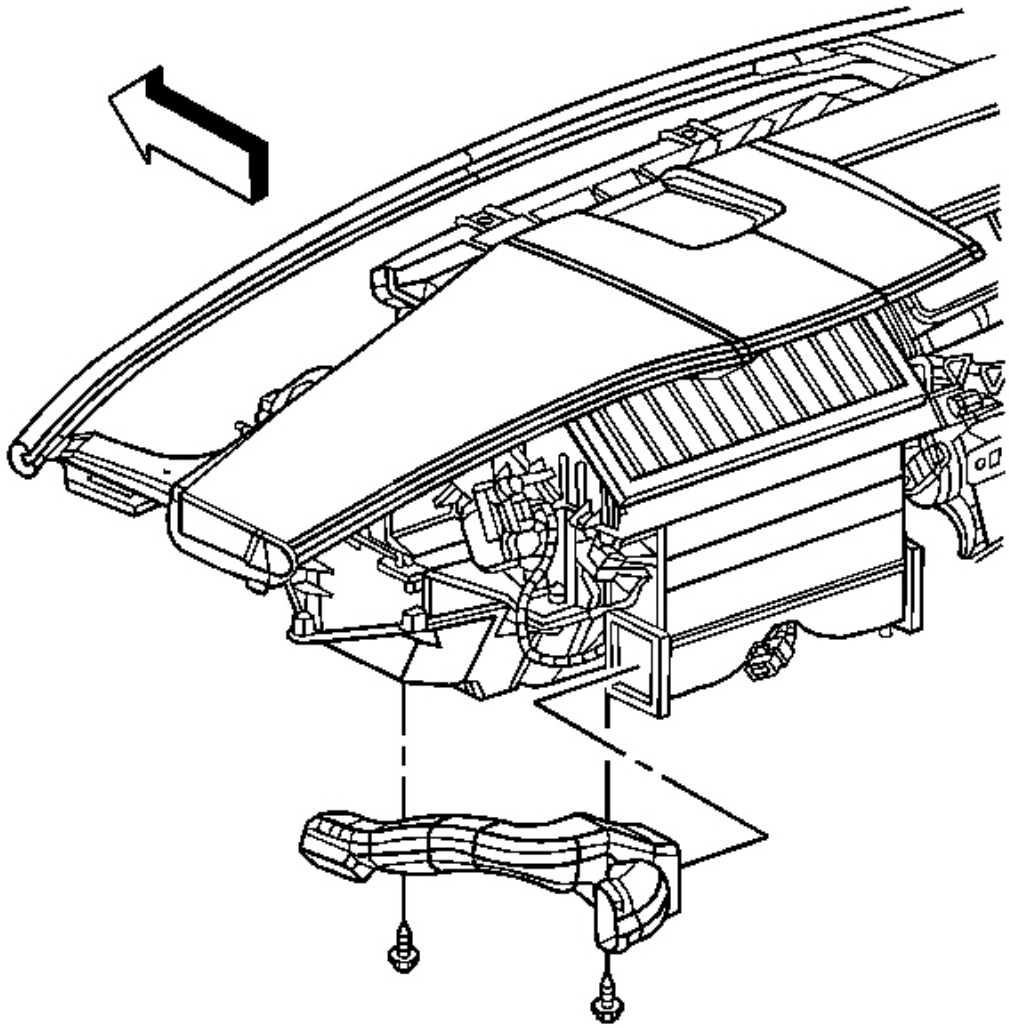

Fig. 108: Floor Air Outlet Duct & Retaining Screws
Courtesy of GENERAL MOTORS CORP.

29. Install the floor air outlet duct retaining screws.

    Tighten: Tighten the screws to 1.6 N.m (14 lb in).

30. Install the air outlet duct.
31. Connect the left floor air outlet duct to the left rear floor air outlet duct.

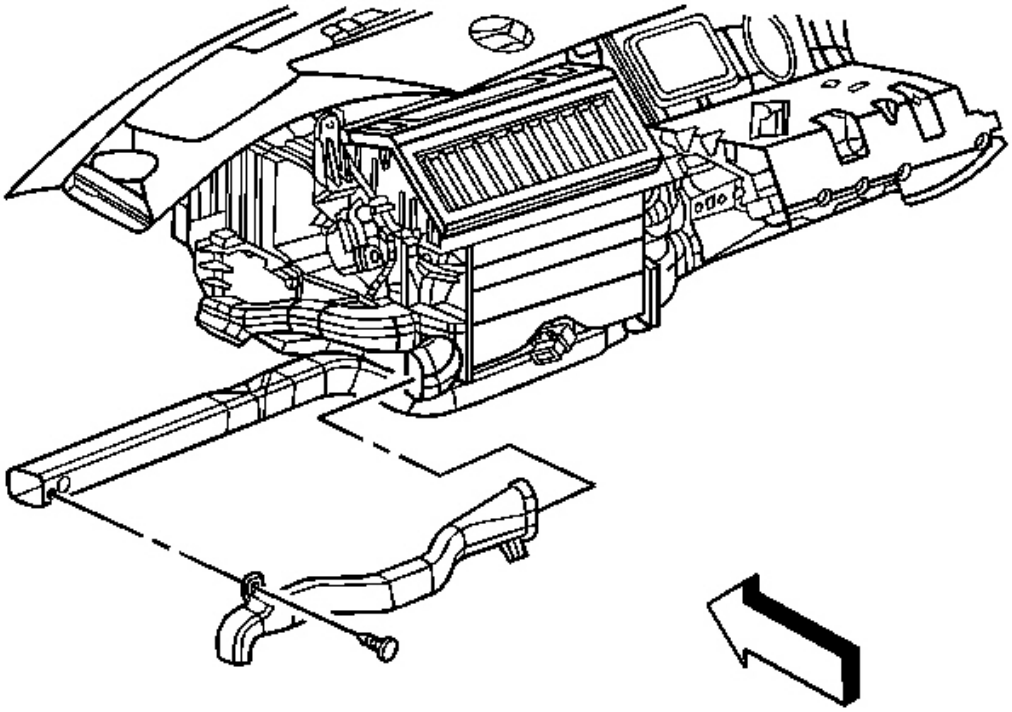

Fig. 109: Identifying Floor Air Outlet Duct & Retainer At I/P Beam
Courtesy of GENERAL MOTORS CORP.

32. Install the retainer securing the left floor air outlet duct to the lower I/P beam.
33. Connect the window defogger lower outlet duct to the defroster duct.

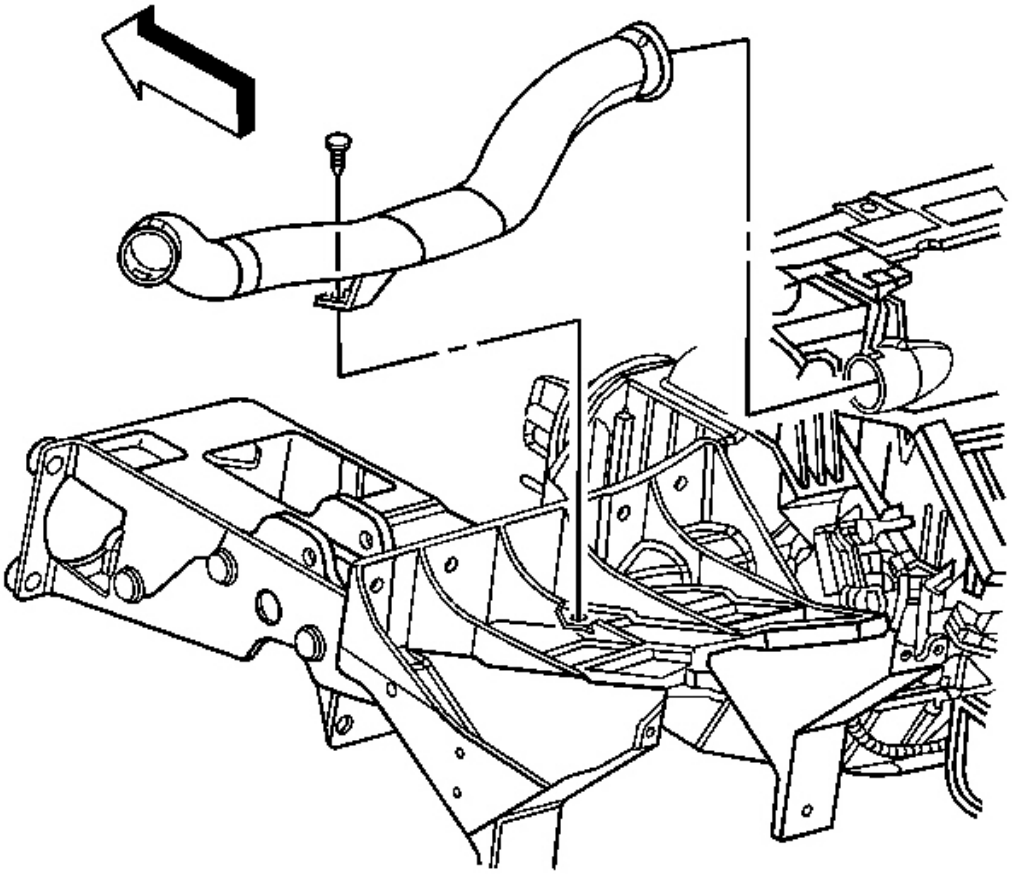

Fig. 110: Identifying Lower Defogger Outlet Duct & Retainer
Courtesy of GENERAL MOTORS CORP.

34. Install the defogger lower outlet duct retainer.
35. Install the screw that secures the HUD to the steering column bracket.

    Tighten: Tighten the screw to 3 N.m (27 lb in).

36. Install the HUD retaining nuts.

    Tighten: Tighten the nuts to 5 N.m (44 lb in).

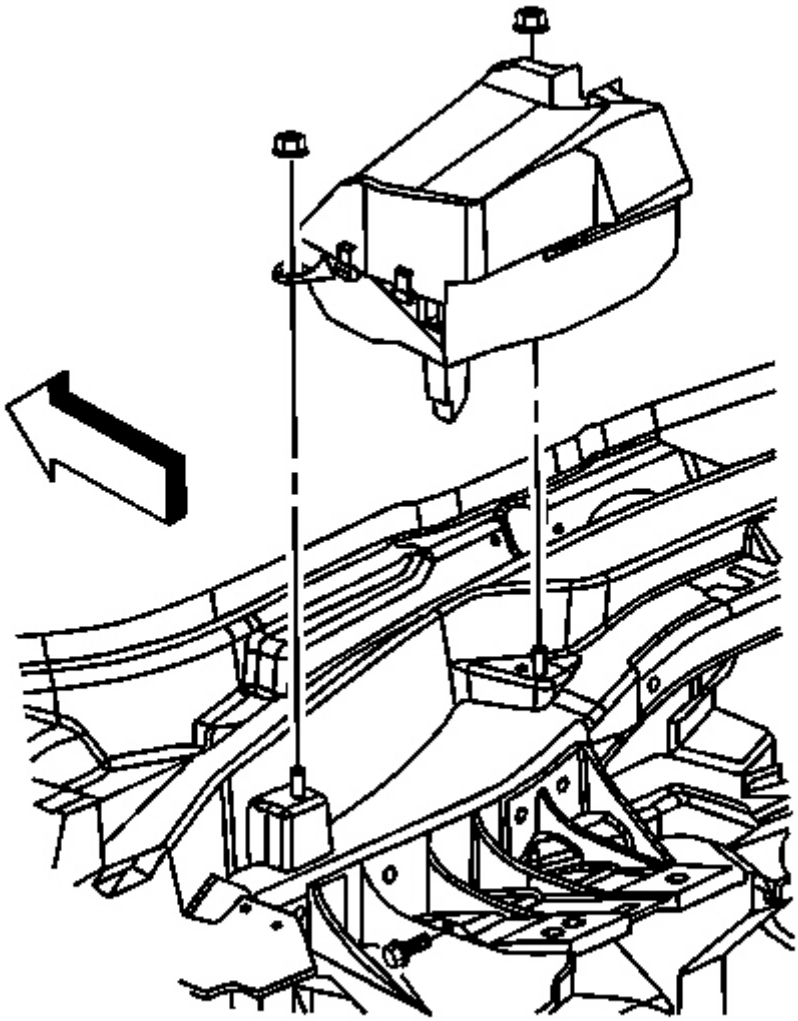

Fig. 111: View Of HUD
Courtesy of GENERAL MOTORS CORP.

37. Connect the HUD electrical connector.
38. Connect the defogger upper outlet duct.

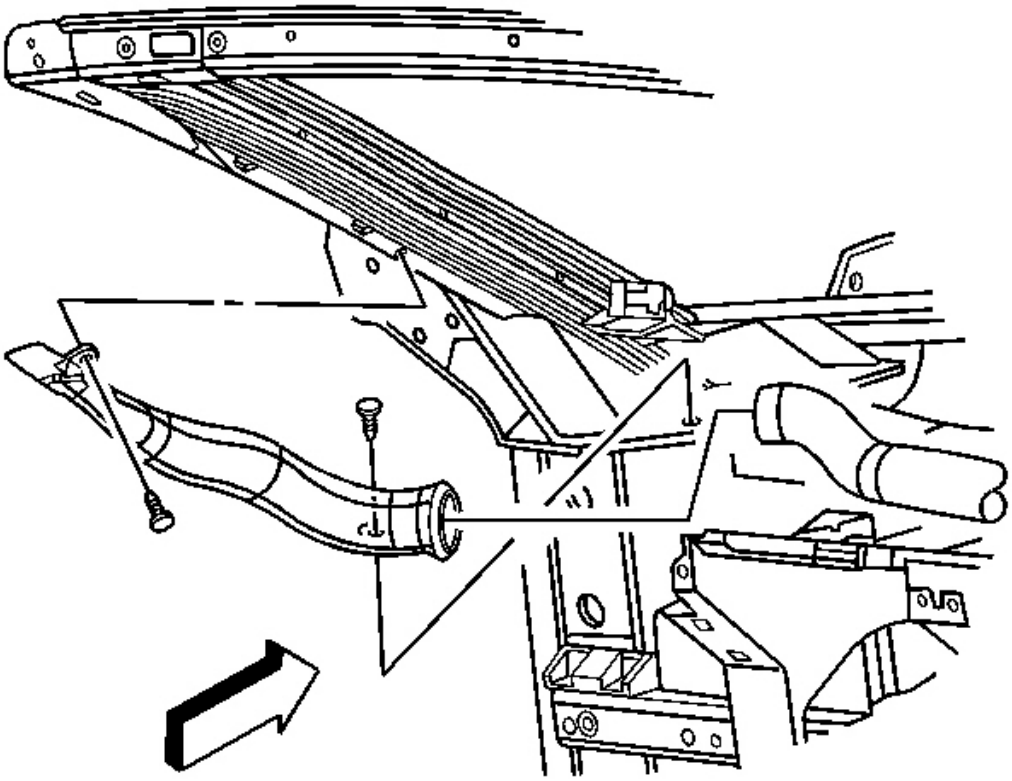

Fig. 112: Defogger Duct & Components
Courtesy of GENERAL MOTORS CORP.

39. Install the retainers to the upper defogger duct.
40. Install the I/P assembly. Refer to **Instrument Panel (I/P) Carrier Replacement** in Instrument Panel, Gages and Console.

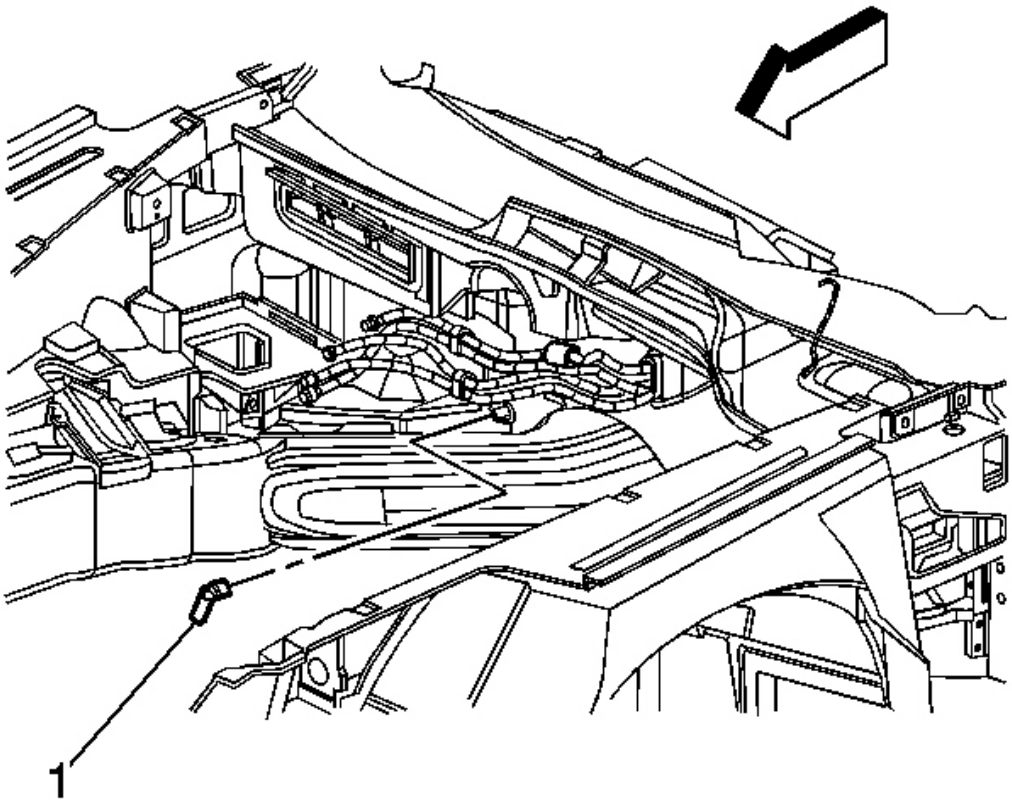

Fig. 113: Identifying Evaporator Drain Tube At HVAC Module
Courtesy of GENERAL MOTORS CORP.

IMPORTANT: Ensure that the evaporator drain tube is fully seated to the HVAC module.

41. Install the evaporator drain tube (1) to the HVAC module.
42. Connect engine wire harness electrical connector.
43. Install the engine wire harness bracket bolt.

    Tighten: Tighten the bolt to 10 N.m (89 lb ft).

44. Install the heater pipe assembly. Refer to **Heater Pipes Replacement**.
45. Fill the cooling system. Refer to **Draining and Filling Cooling System** in Engine Cooling.

46. Evacuate and recharge the A/C system. Refer to **Refrigerant Recovery and Recharging**.
47. Leak test the fittings of the component using **J 39400-A** .

EVAPORATOR CORE REPLACEMENT

Tools Required

J 39400-A Halogen Leak Detector

Removal Procedure

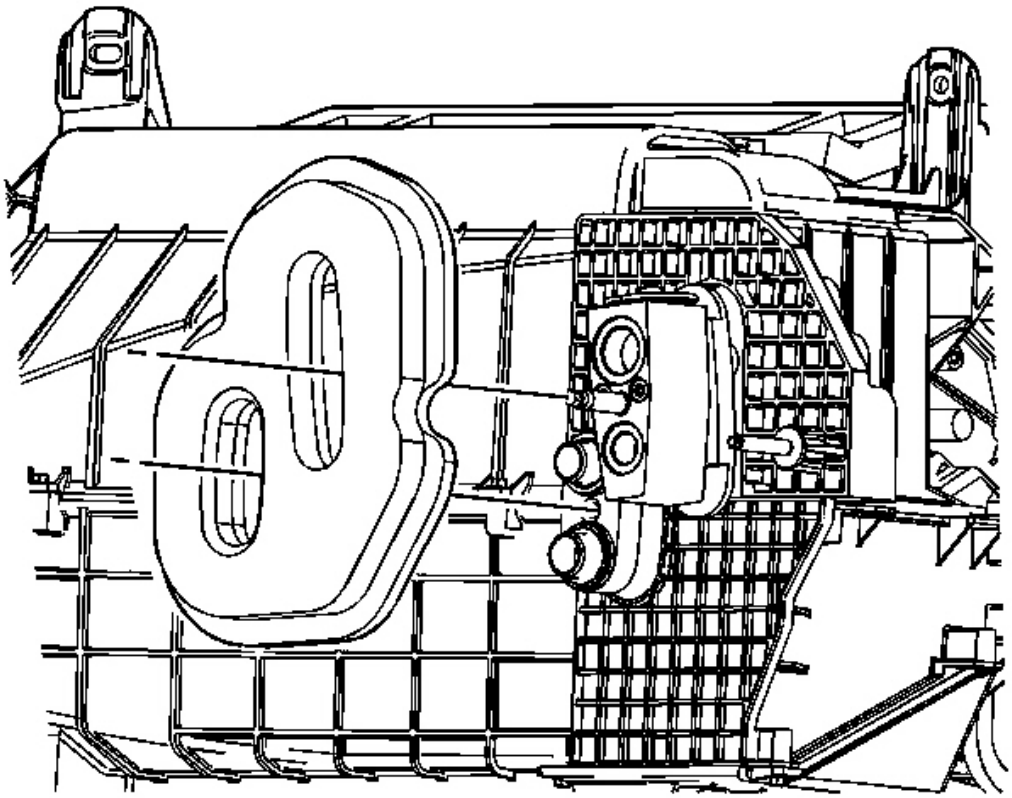

Fig. 114: Identifying HVAC Module Assembly Foam Seal
Courtesy of GENERAL MOTORS CORP.

1. Remove the HVAC module. Refer to **HVAC Module Assembly Replacement**.
2. Remove and discard the HVAC module assembly foam seal.

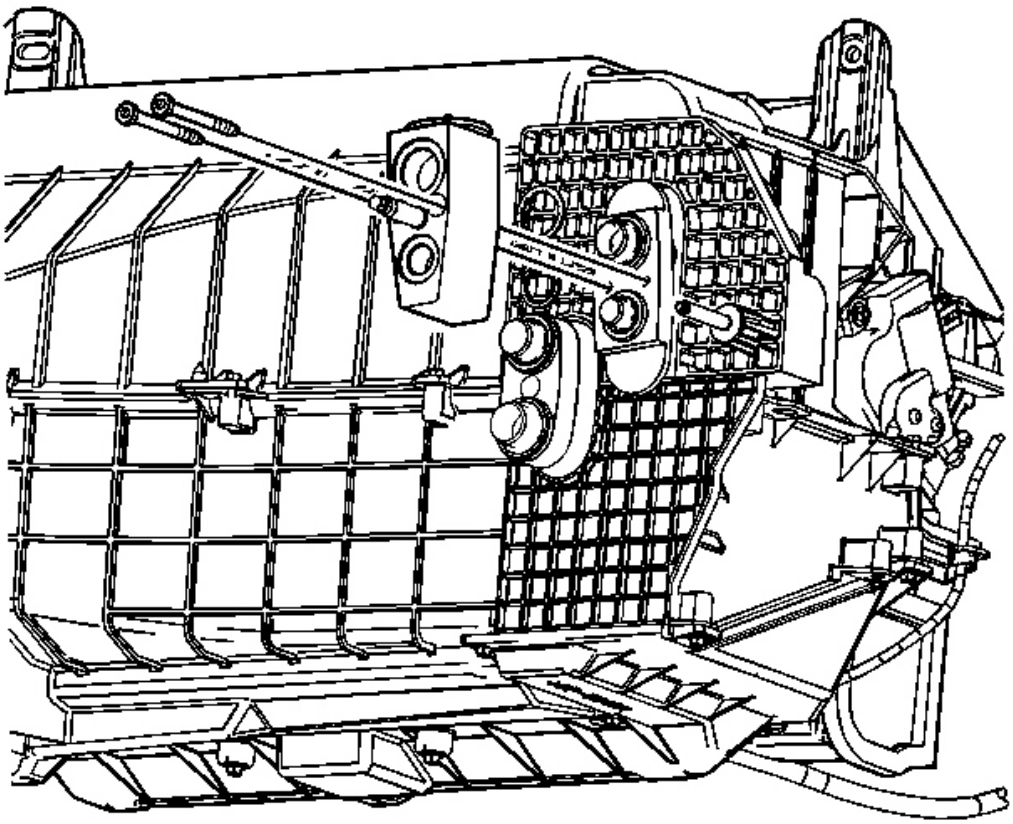

Fig. 115: TXV & Components With Evaporator Core
Courtesy of GENERAL MOTORS CORP.

3. Remove the TXV mounting bolts.
4. Remove the TXV from the evaporator core.
5. Remove and discard the sealing washers.

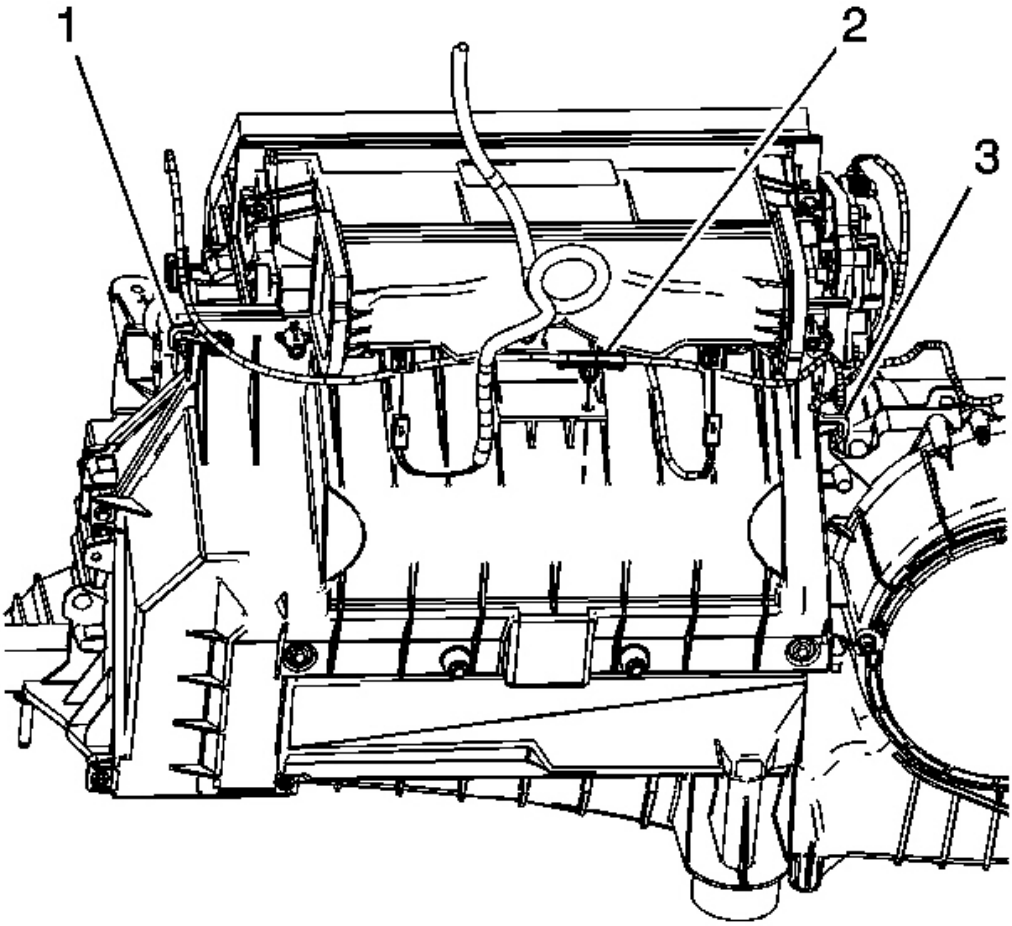

Fig. 116: Identifying Heater Core Cover Wire Harness Retainer & HVAC Module Wiring Harness Retainer Pin
Courtesy of GENERAL MOTORS CORP.

6. Disconnect the discharge temperature management (DTM) sensor electrical connectors.
7. Disconnect the HVAC module wiring harness retainer pin (2) from the HVAC module.
8. Disconnect the wiring harness from the heater core cover wire harness retainer (1) and reposition the wiring harness aside.
9. Disconnect the wiring harness from the heater core cover wire harness retainer (3) and reposition the wiring harness aside.

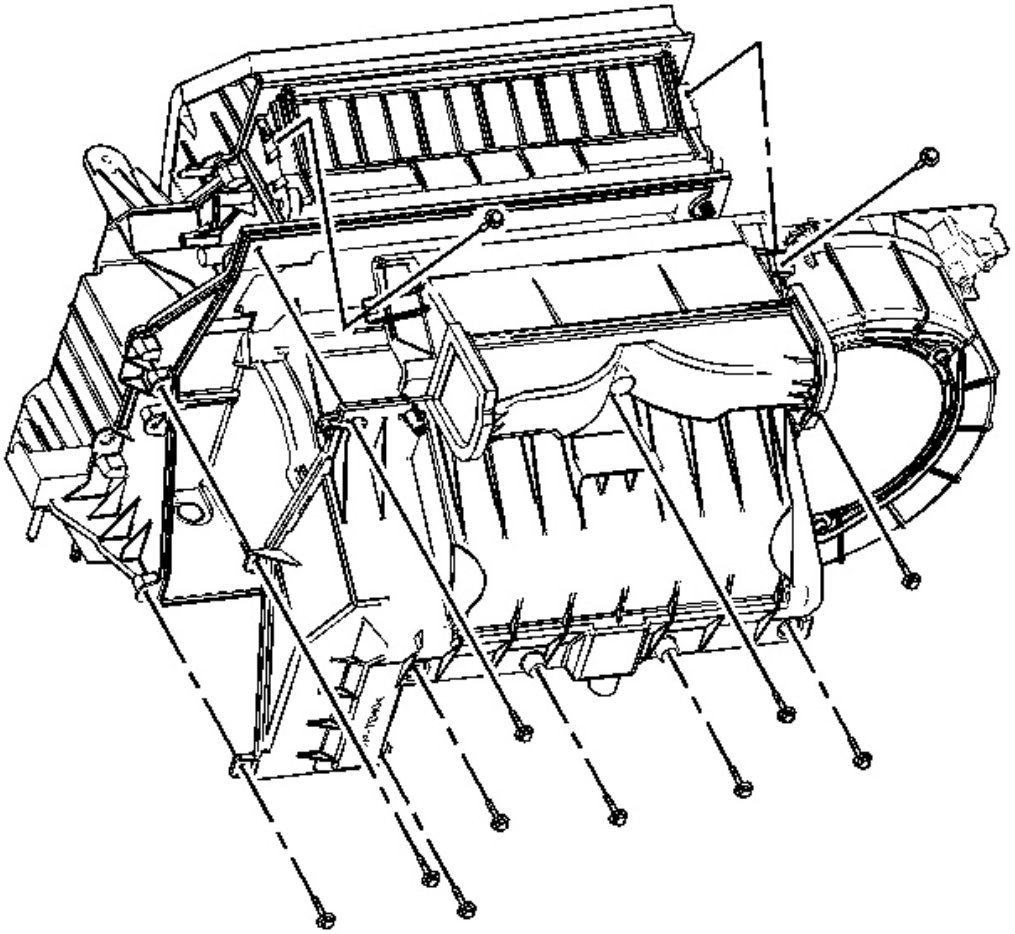

Fig. 117: Identifying Heater Cover Screws
Courtesy of GENERAL MOTORS CORP.

10. Remove the heater cover screws.
11. Remove the heater cover from the HVAC module.

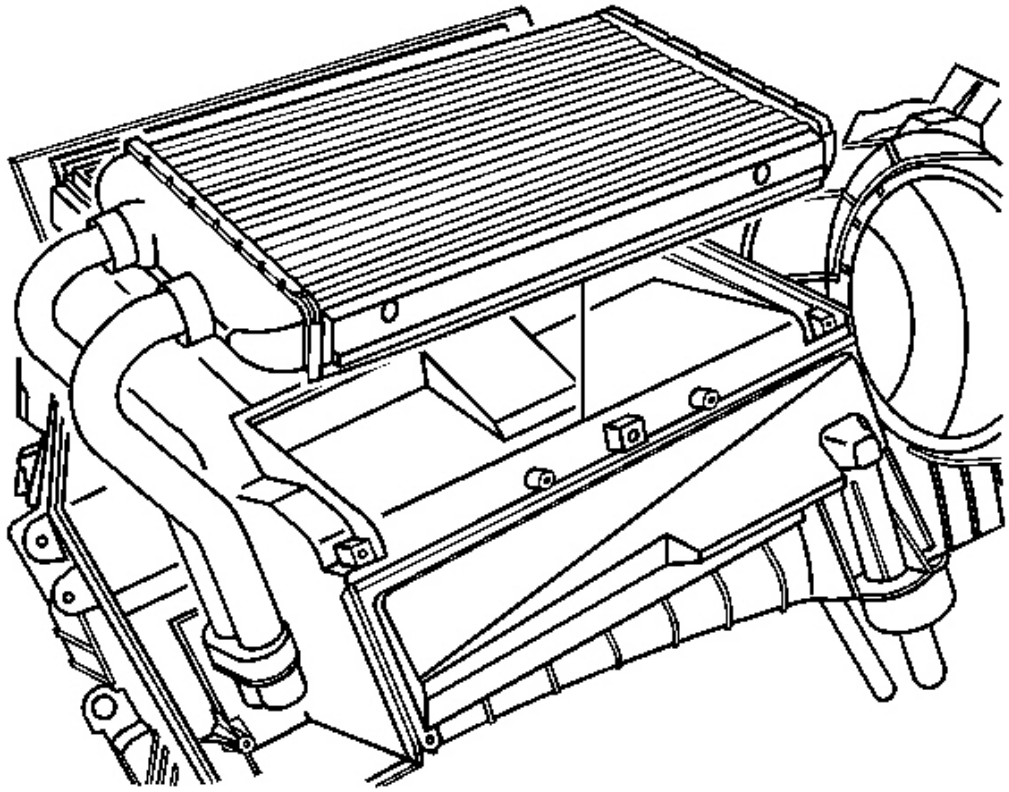

Fig. 118: Identifying Heater Core & HVAC Module
Courtesy of GENERAL MOTORS CORP.

12. Remove the heater core from the HVAC module.

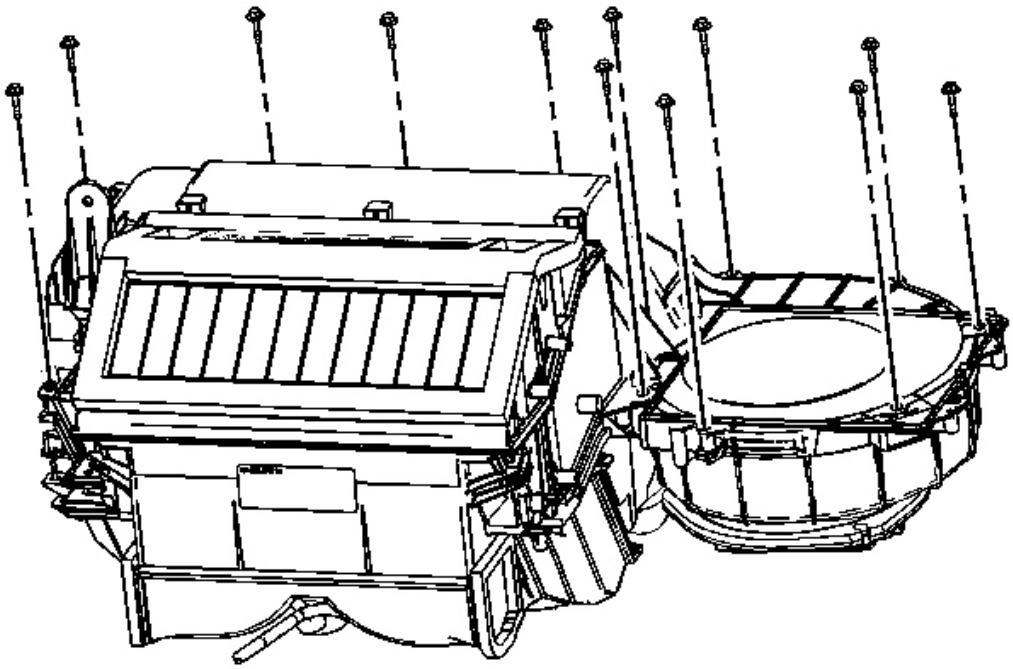

Fig. 119: Identifying HVAC Module Case Retaining Screws
Courtesy of GENERAL MOTORS CORP.

13. Remove the HVAC module case retaining screws.

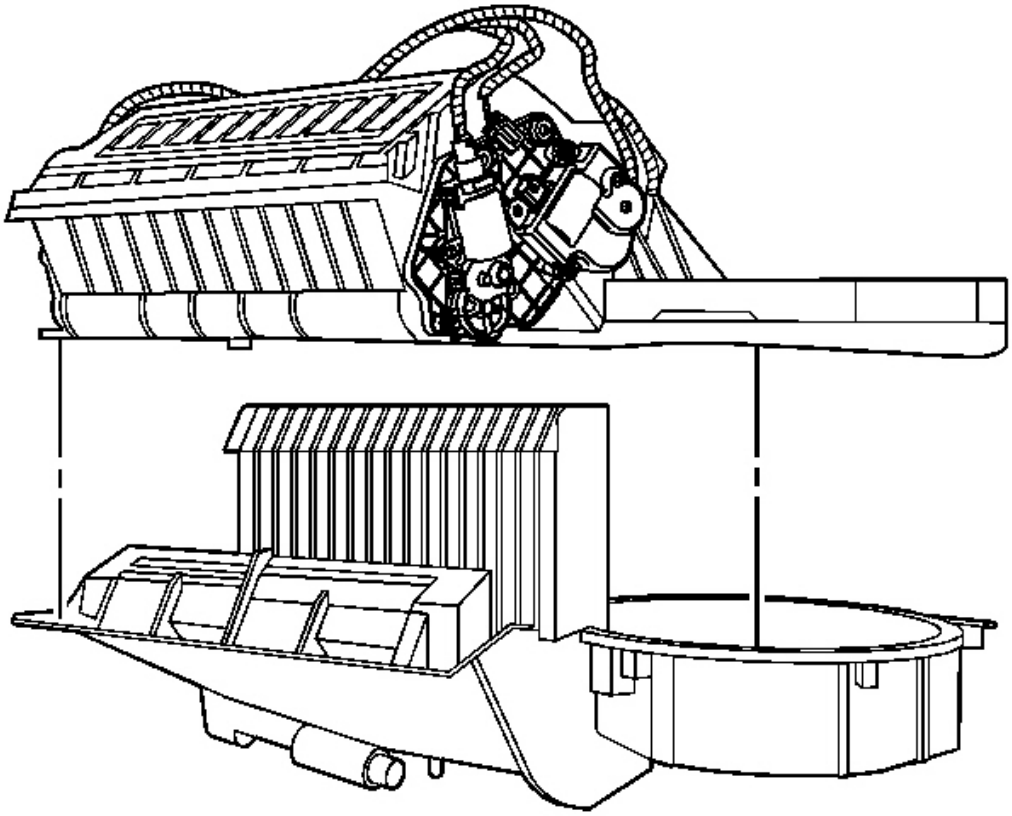

Fig. 120: HVAC Module Upper Case & HVAC Module Lower Case
Courtesy of GENERAL MOTORS CORP.

14. Separate the HVAC module upper case from the HVAC module lower case.

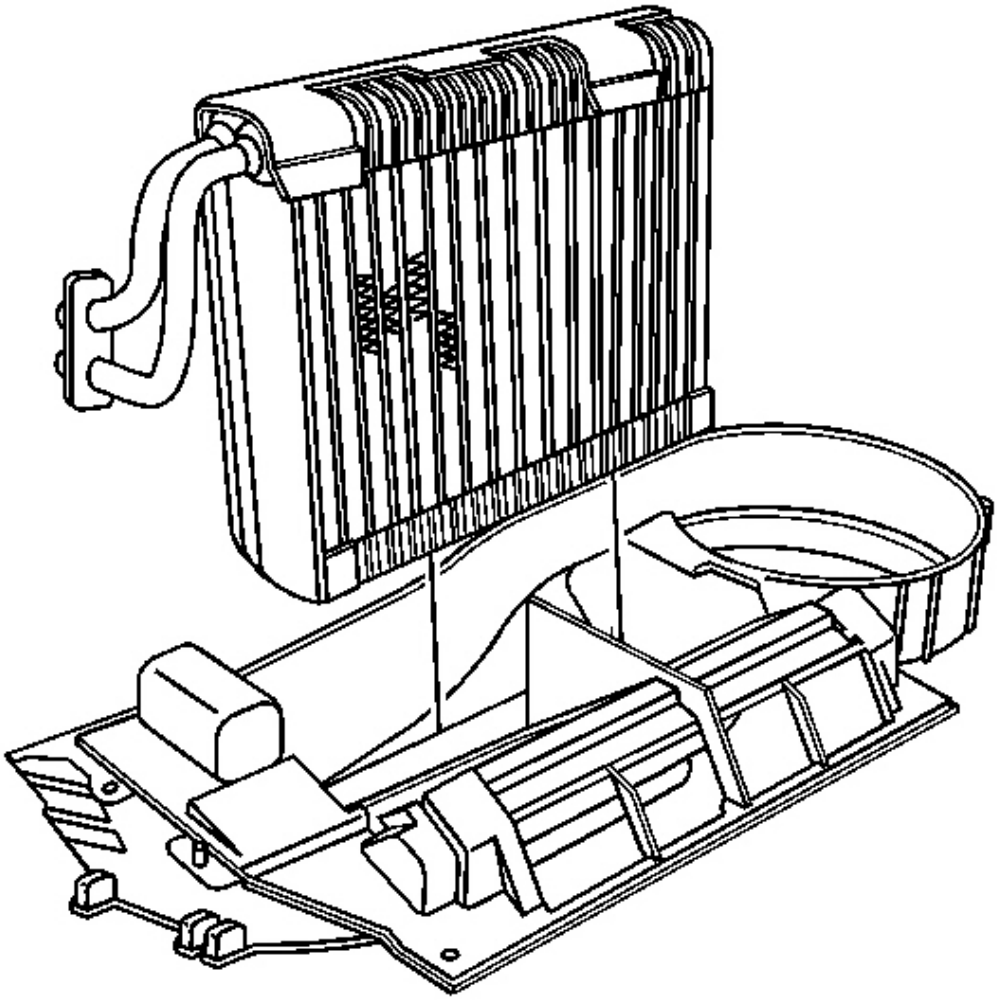

Fig. 121: Evaporator Core & HVAC Module
Courtesy of GENERAL MOTORS CORP.

15. Remove the evaporator core from the HVAC module.

Installation Procedure

1. If replacing the evaporator core, add the specified amount of PAG oil directly to the evaporator core. Refer to **Refrigerant System Capacities**.

IMPORTANT: Line the evaporator core side seal up with the corners of the evaporator core.

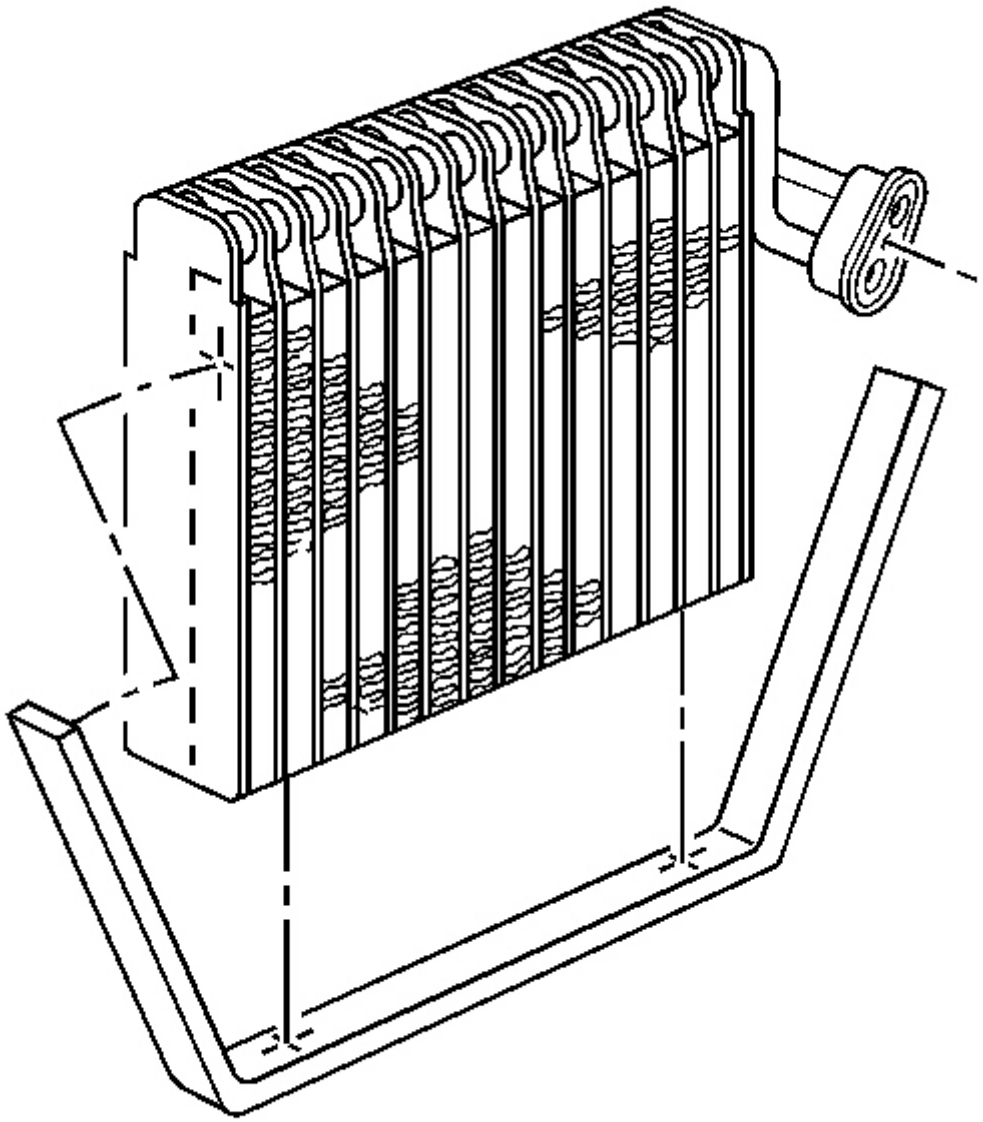

Fig. 122: Evaporator Core & Side Seal
Courtesy of GENERAL MOTORS CORP.

2. Install a new side seal to the evaporator core.

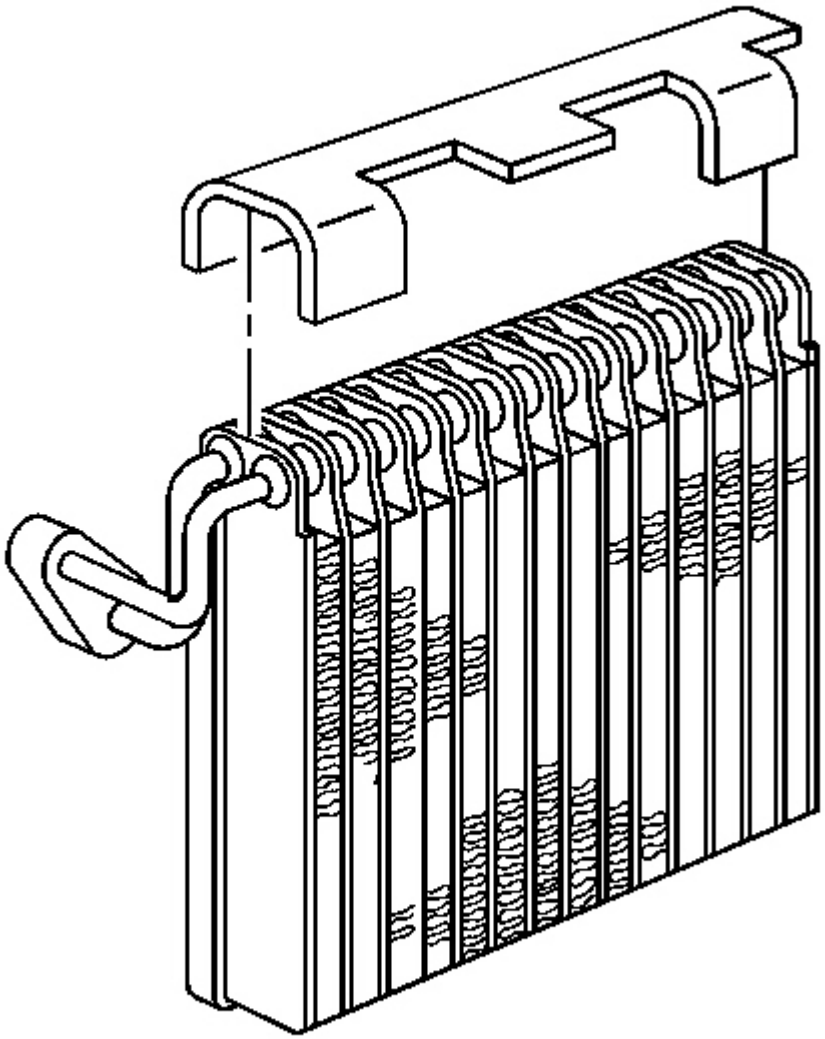

Fig. 123: Evaporator Core & Upper Seal
Courtesy of GENERAL MOTORS CORP.

3. Install a new upper seal to the evaporator core.

IMPORTANT: Locate the seals at the outer corners of the evaporator core.

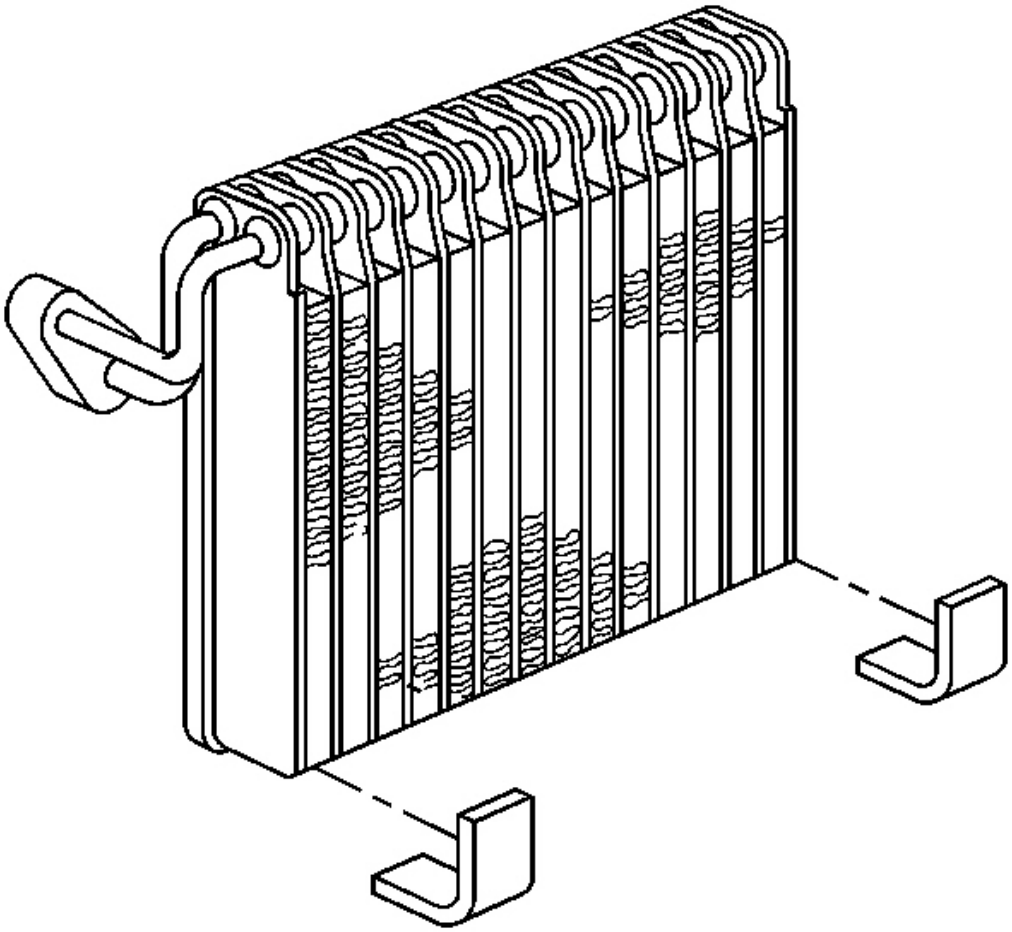

Fig. 124: Evaporator Core & Lover Seals
Courtesy of GENERAL MOTORS CORP.

4. Install two new lower seals to the evaporator core.

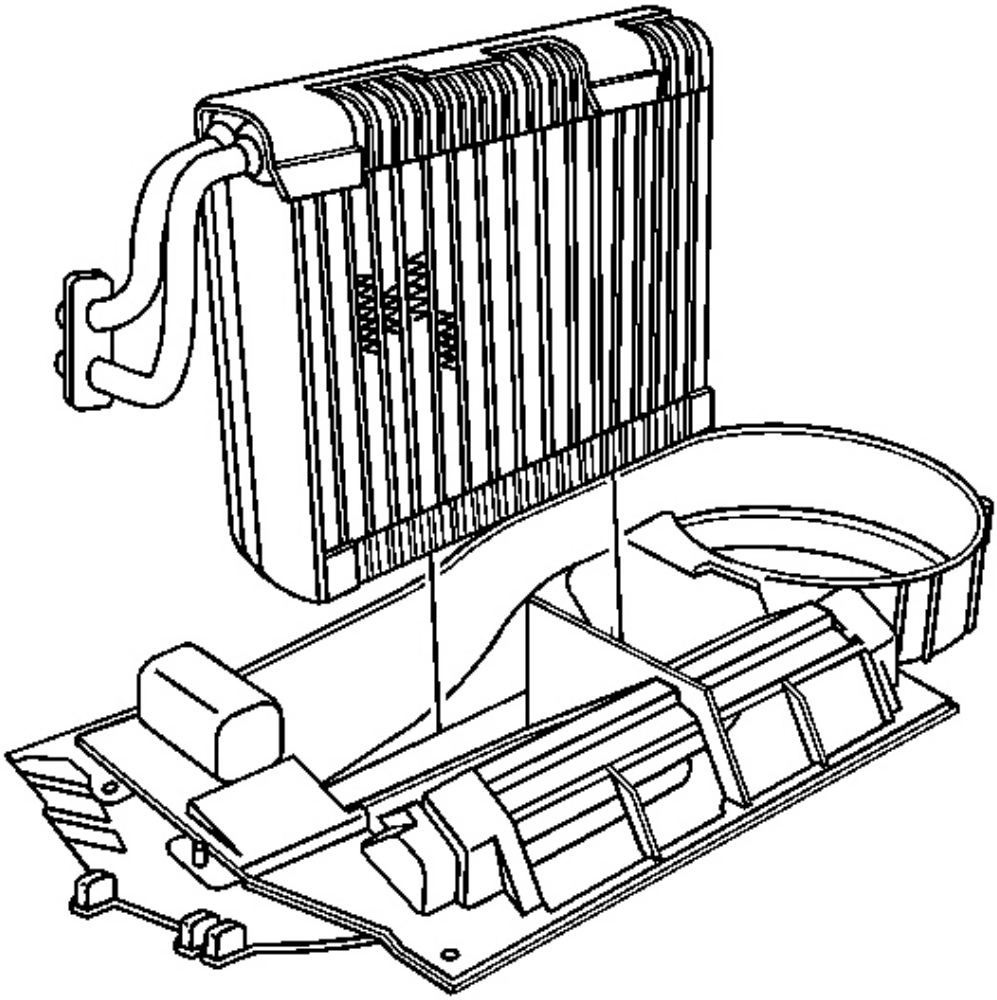

Fig. 125: Evaporator Core & HVAC Module
Courtesy of GENERAL MOTORS CORP.

5. Install the evaporator core to the HVAC module.

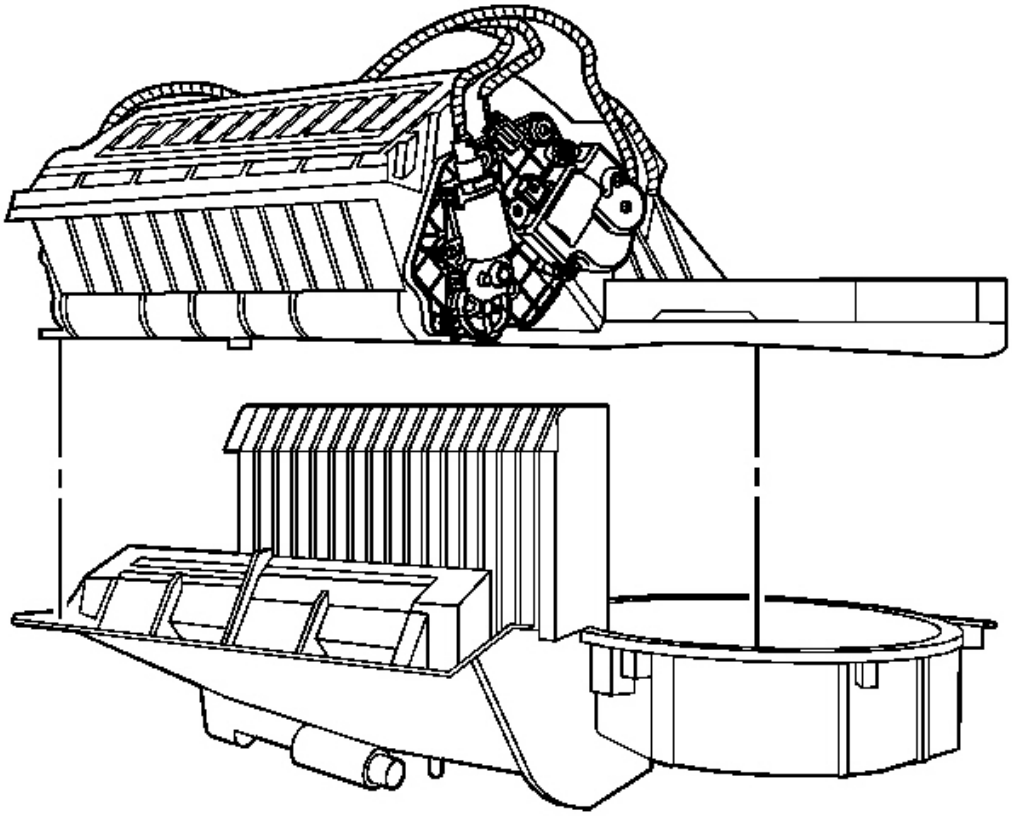

Fig. 126: HVAC Module Upper Case & HVAC Module Lower Case
Courtesy of GENERAL MOTORS CORP.

6. Install the HVAC module upper case to the HVAC module lower case.

NOTE: Refer to Fastener Notice in Cautions and Notices.

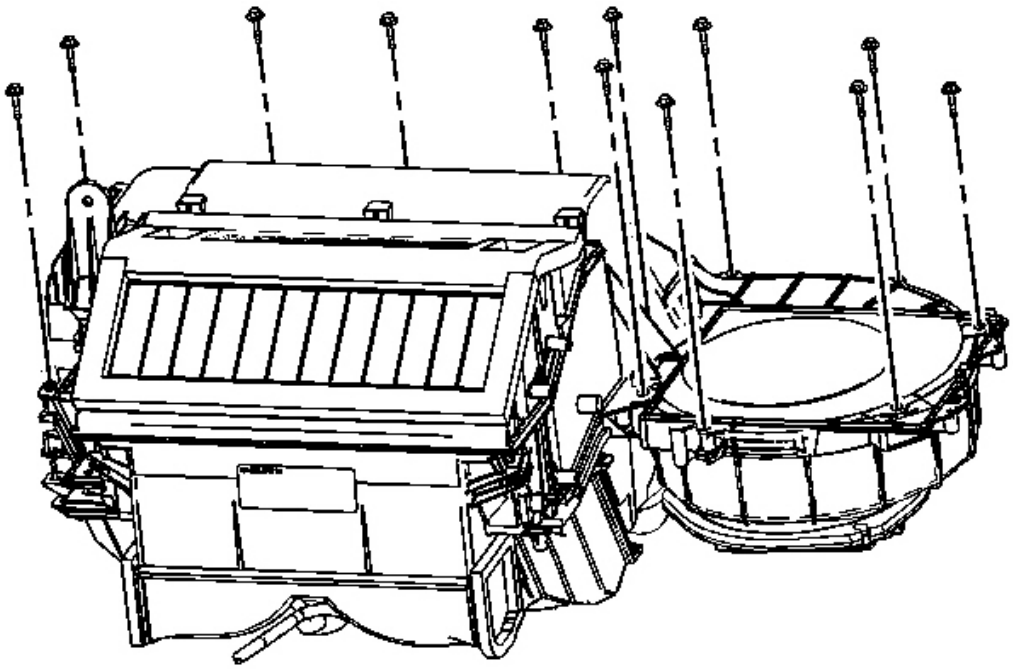

Fig. 127: Identifying HVAC Module Case Retaining Screws
Courtesy of GENERAL MOTORS CORP.

7. Install the HVAC module case retaining screws.

   Tighten: Tighten the screws to 1.6 N.m (14 lb in).

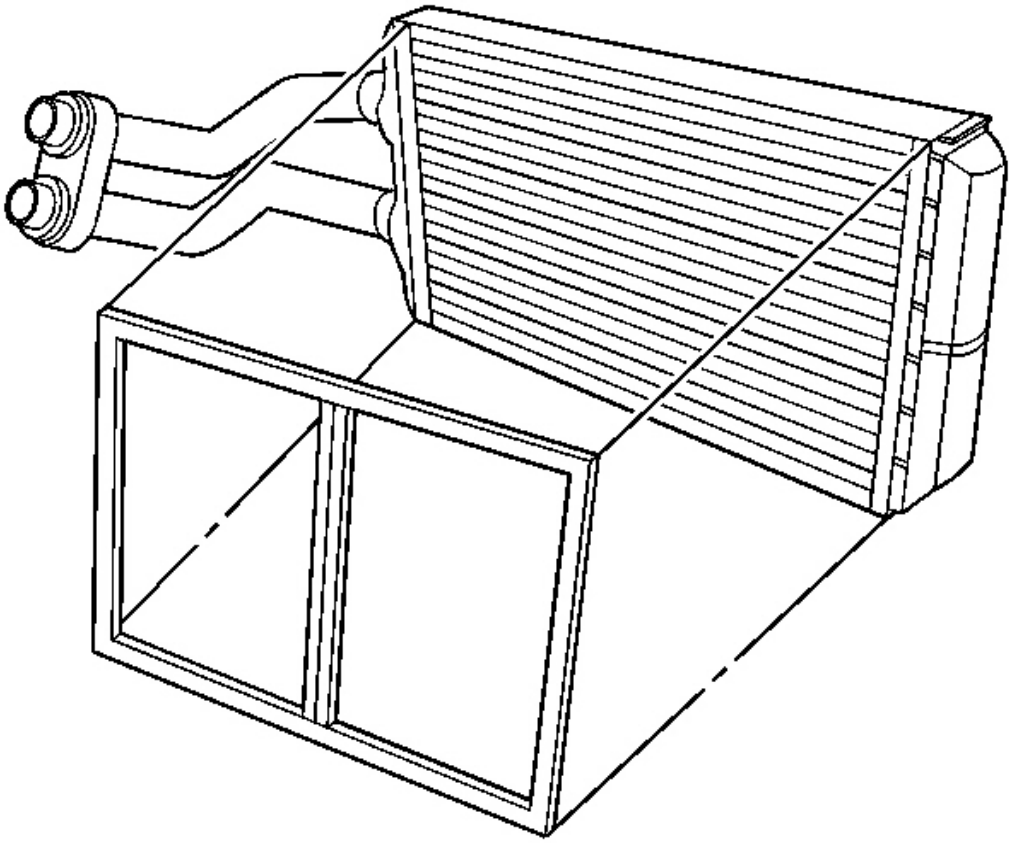

Fig. 128: Identifying Foam Sealer
Courtesy of GENERAL MOTORS CORP.

8. Install a new foam seal to the heater core.

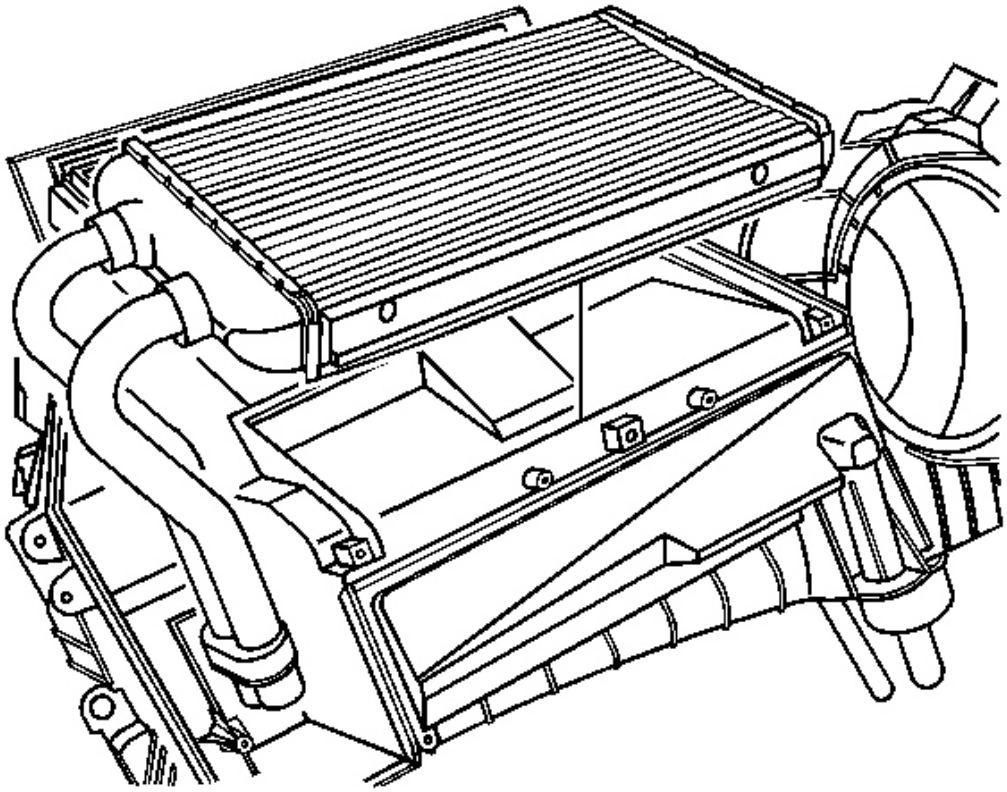

Fig. 129: Identifying Heater Core & HVAC Module
Courtesy of GENERAL MOTORS CORP.

9. Install the heater core to the HVAC module.
10. Install the heater cover to the HVAC module.

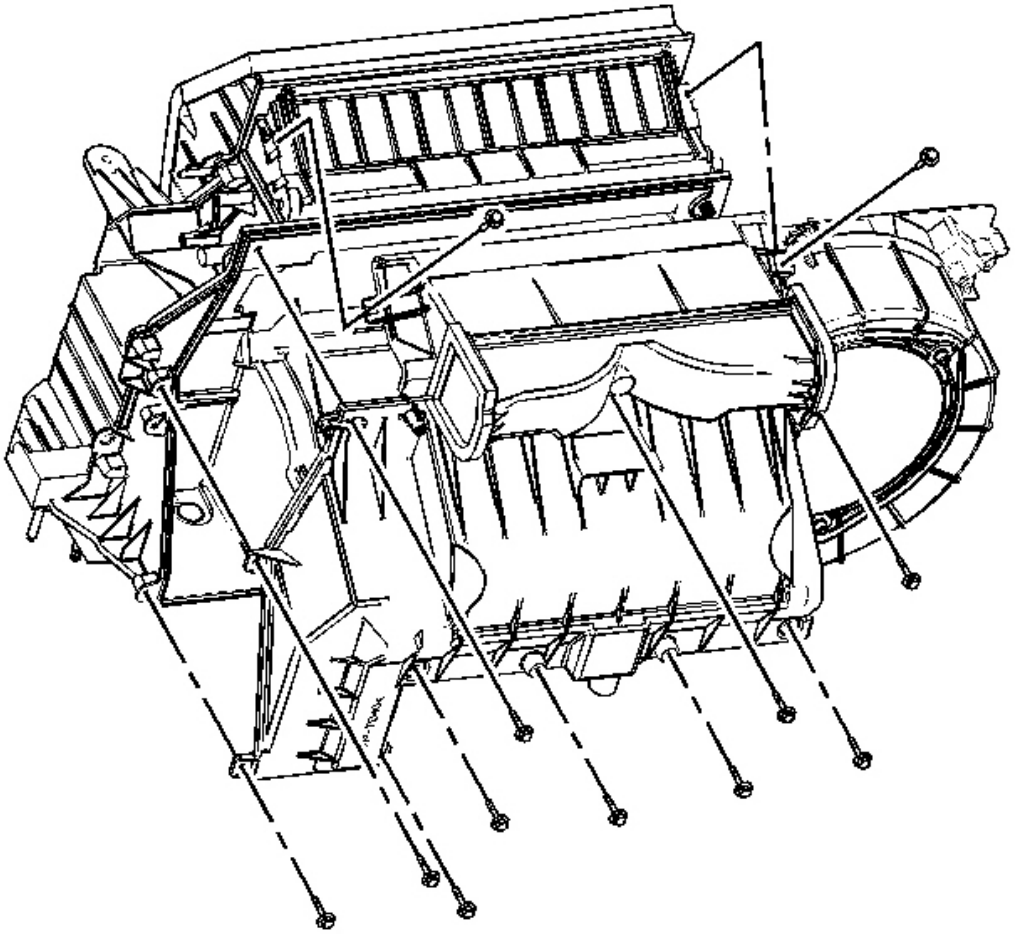

Fig. 130: Identifying Heater Cover Screws
Courtesy of GENERAL MOTORS CORP.

11. Install the heater cover screws.

    Tighten: Tighten the screws to 1.6 N.m (14 lb in).

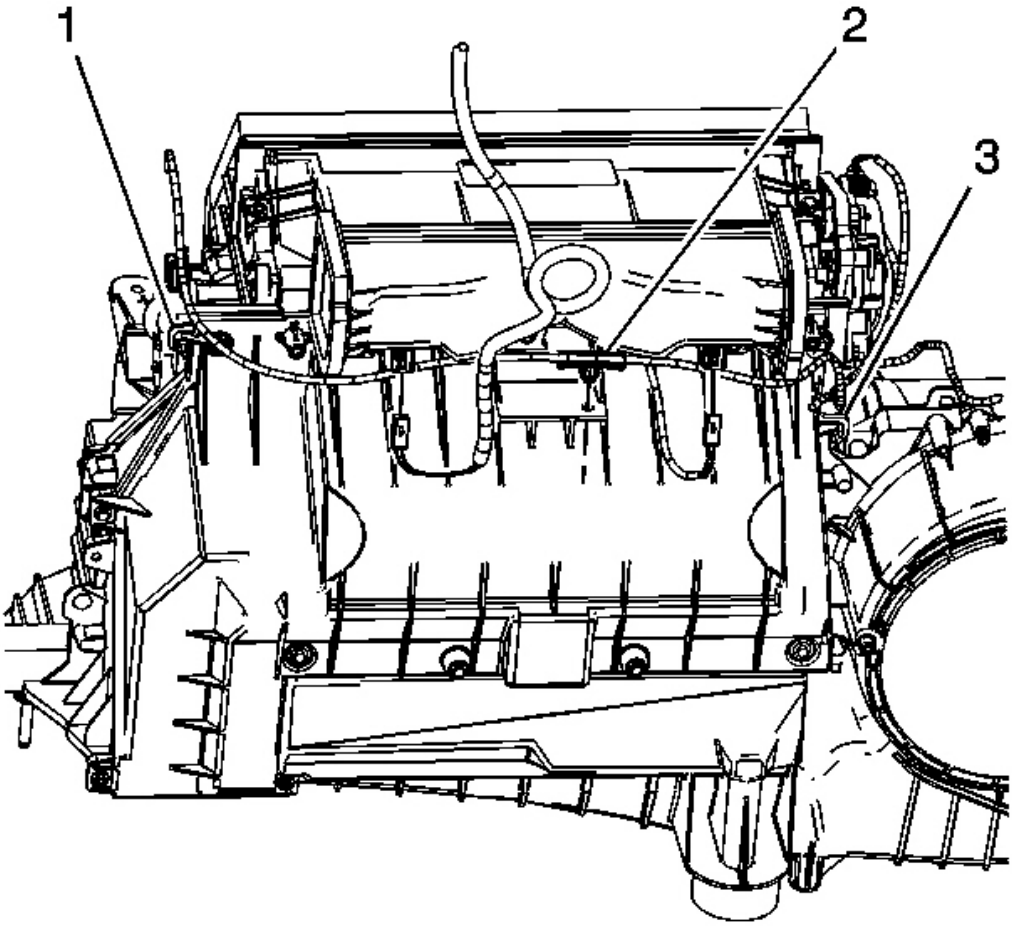

Fig. 131: Identifying Heater Core Cover Wire Harness Retainer & HVAC Module Wiring Harness Retainer Pin
Courtesy of GENERAL MOTORS CORP.

12. Reposition the HVAC wiring harness and connect the wiring harness to the heater core cover wiring harness retainer (1).
13. Reposition the HVAC wiring harness and connect the wiring harness to the heater core cover wiring harness retainer (3).
14. Connect the HVAC module wiring harness retainer pin (2) to the HVAC module.
15. Connect the discharge temperature management (DTM) sensor electrical connectors.

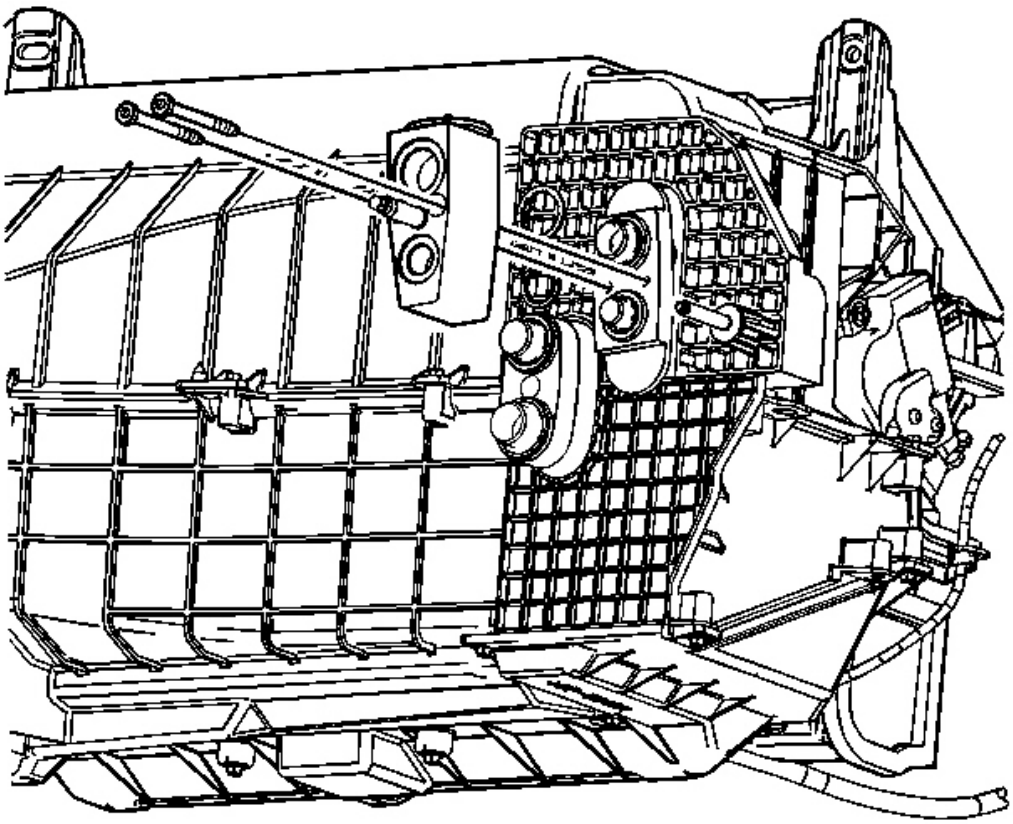

Fig. 132: TXV & Components With Evaporator Core
Courtesy of GENERAL MOTORS CORP.

16. Install new sealing washers to the evaporator core. Refer to **Sealing Washer Replacement**.
17. Install the TXV to the evaporator core.
18. Install the TXV to mounting bolts.

    Tighten: Tighten the bolts to 7 N.m (62 lb in).

19. Install the HVAC module. Refer to **HVAC Module Assembly Replacement**.

EVAPORATOR DRAIN TUBE REPLACEMENT

Removal Procedure

1. Remove the intake manifold. Refer to **Intake Manifold Replacement** in Engine Mechanical - 4.6L.
2. Remove the engine wire harness bracket bolt.
3. Disconnect engine wire harness electrical connector and reposition aside.

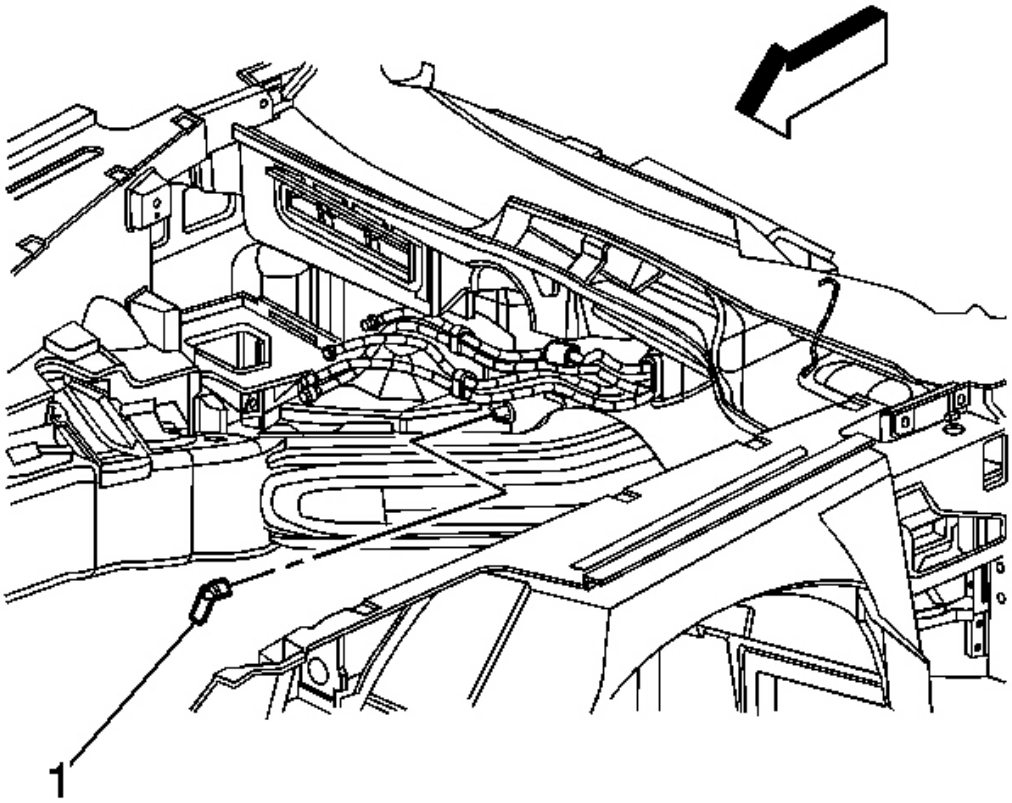

Fig. 133: Identifying Evaporator Drain Tube At HVAC Module
Courtesy of GENERAL MOTORS CORP.

4. Remove the HVAC module drain tube (1) from the HVAC module.

Installation Procedure

IMPORTANT: Ensure that the HVAC module drain tube is fully seated onto the HVAC module.

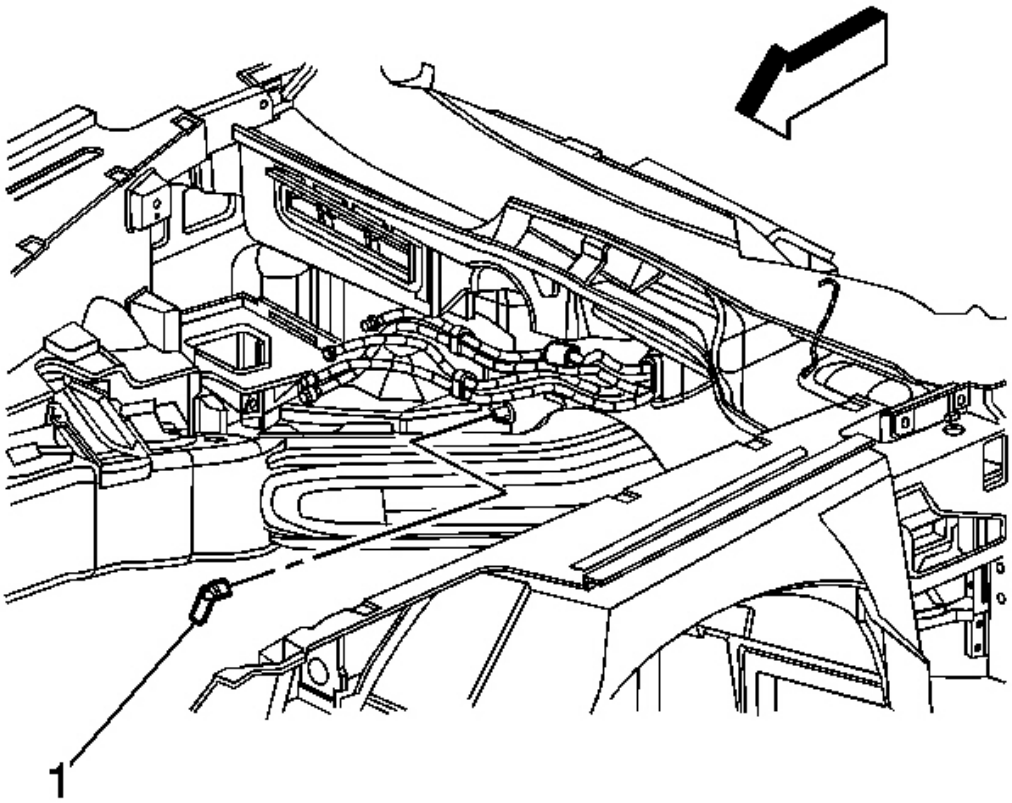

Fig. 134: Identifying Evaporator Drain Tube At HVAC Module
Courtesy of GENERAL MOTORS CORP.

1. Install the HVAC module drain tube (1) to the HVAC module.
2. Connect engine wire harness electrical connector.

NOTE: Refer to Fastener Notice in Cautions and Notices.

3. Install the engine wire harness bracket bolt.

   Tighten: Tighten the bolt to 10 N.m (89 lb in).

4. Install the intake manifold. Refer to **Intake Manifold Replacement** in Engine Mechanical - 4.6L.

HEATER HOSE REPLACEMENT - INLET

Removal Procedure

1. Drain the cooling system. Refer to **Draining and Filling Cooling System** in Engine Cooling.
2. Remove the battery. Refer to **Battery Replacement** in Engine Electrical.

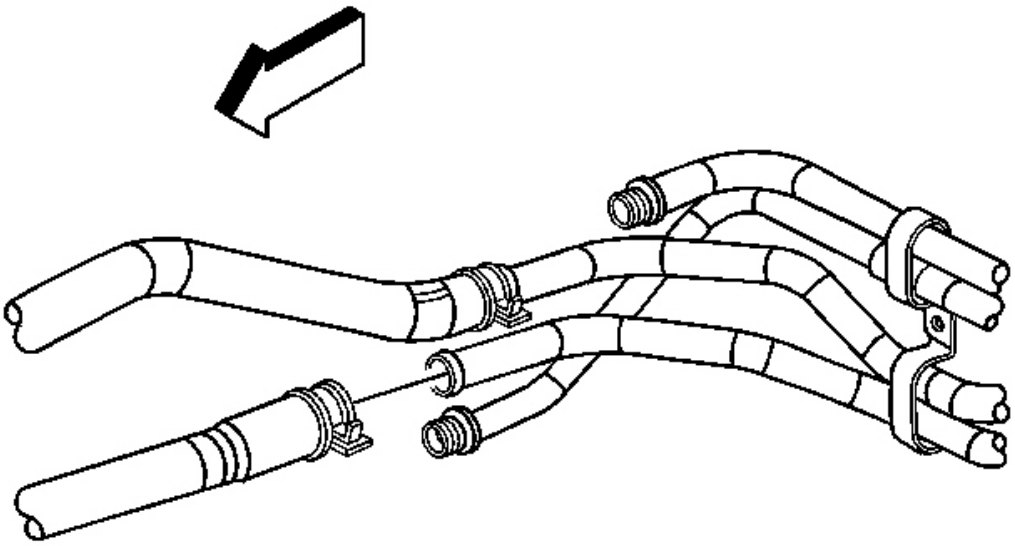

Fig. 135: Heater Inlet Hose Clamp At Heater Pipe Assembly
Courtesy of GENERAL MOTORS CORP.

3. Disengage tension on the heater inlet hose clamp at the heater pipe assembly.
4. Disconnect the heater inlet hose from the heater pipe assembly.

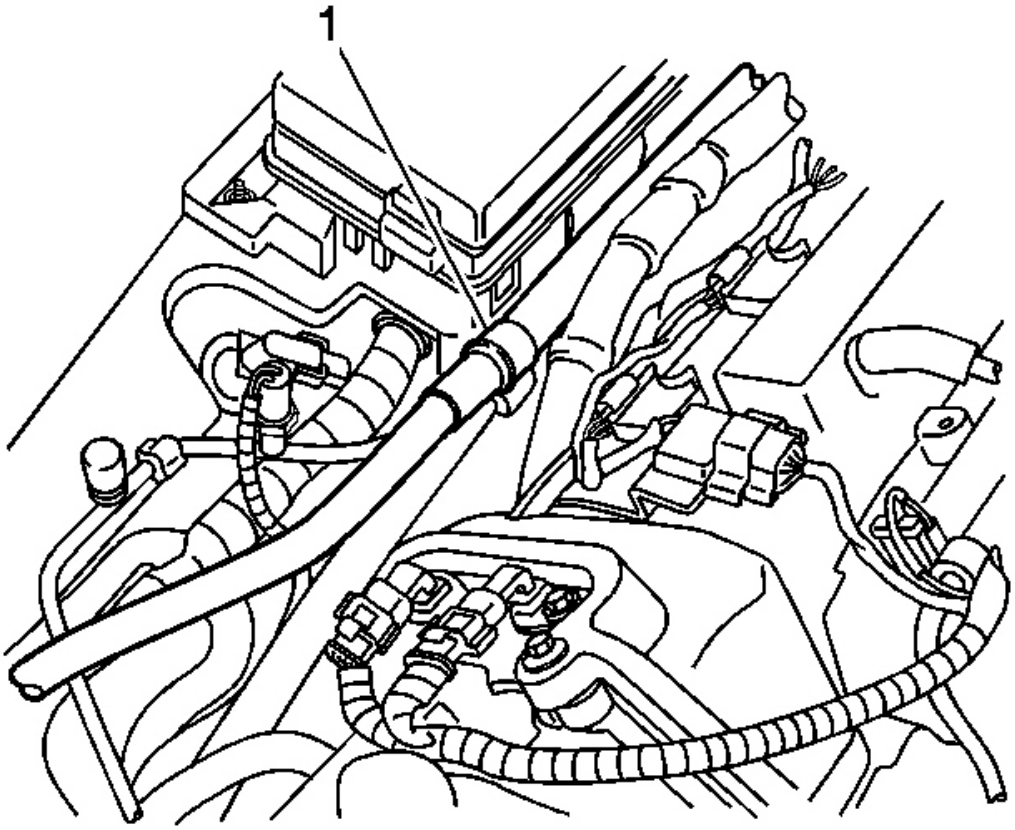

Fig. 136: View Of Underhood Junction Box Retainer Clip
Courtesy of GENERAL MOTORS CORP.

5. Disconnect the heater inlet hose from the underhood junction box retainer clip (1).

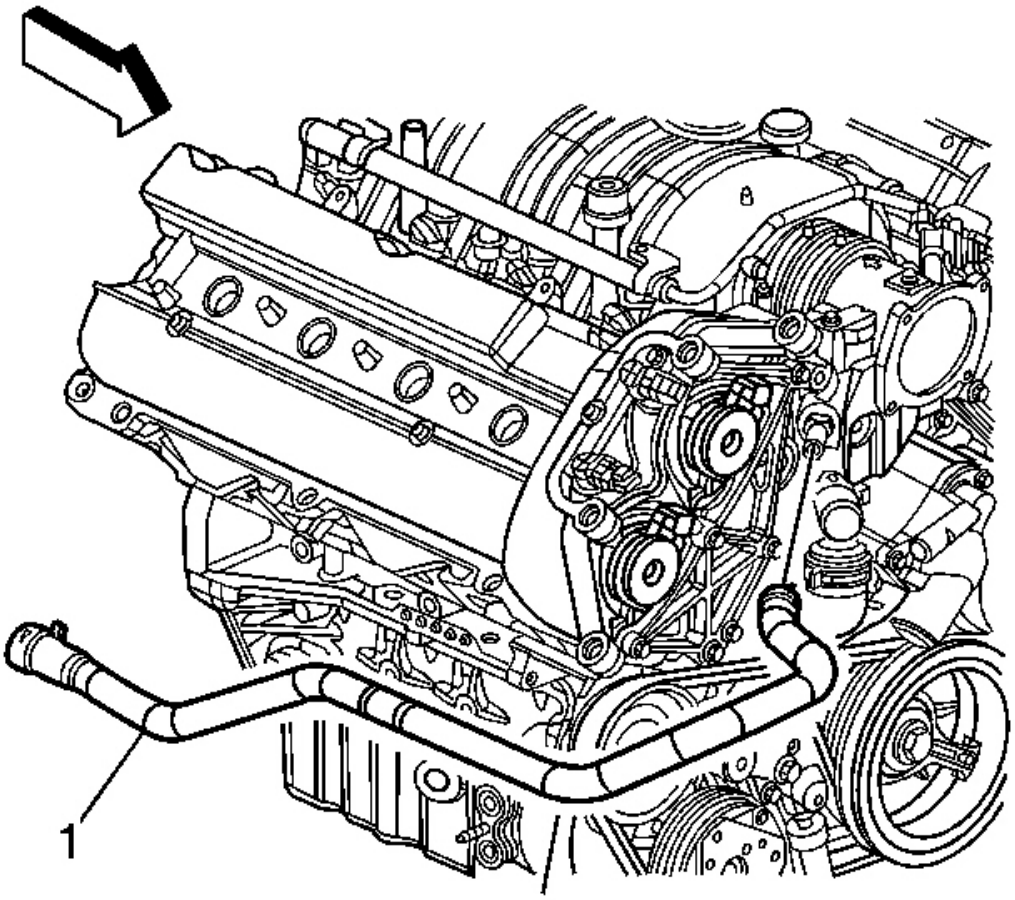

Fig. 137: Identifying Heater Inlet Hose At Water Pump
Courtesy of GENERAL MOTORS CORP.

6. Disengage tension on the heater inlet hose clamp at the water pump.
7. Disconnect the heater inlet hose (1) from the water pump.
8. Remove the heater inlet hose from the vehicle.

Installation Procedure

IMPORTANT: Lubricate the inside diameters of the hose with clean coolant prior to installation.

1. Install the heater inlet hose on to the vehicle.

2. Connect the heater inlet hose (1) to the water pump.

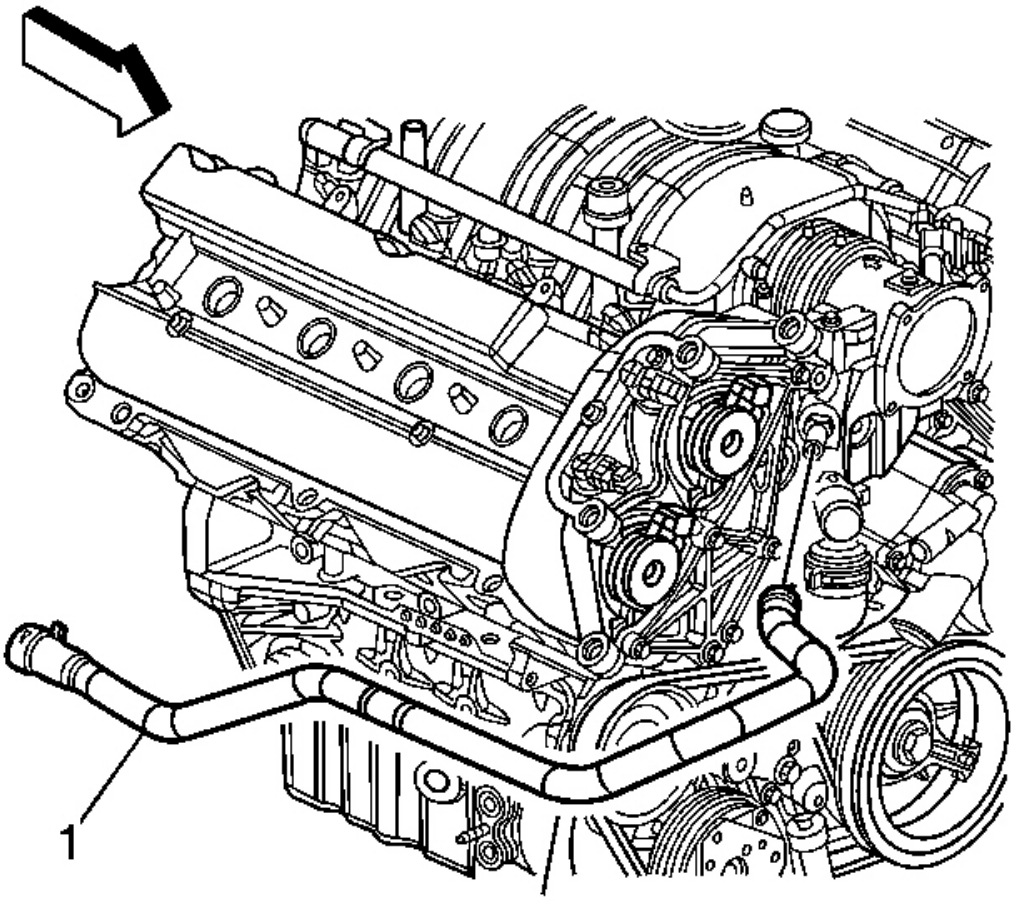

Fig. 138: Identifying Heater Inlet Hose At Water Pump
Courtesy of GENERAL MOTORS CORP.

3. Engage tension on the heater inlet hose clamp at the water pump.

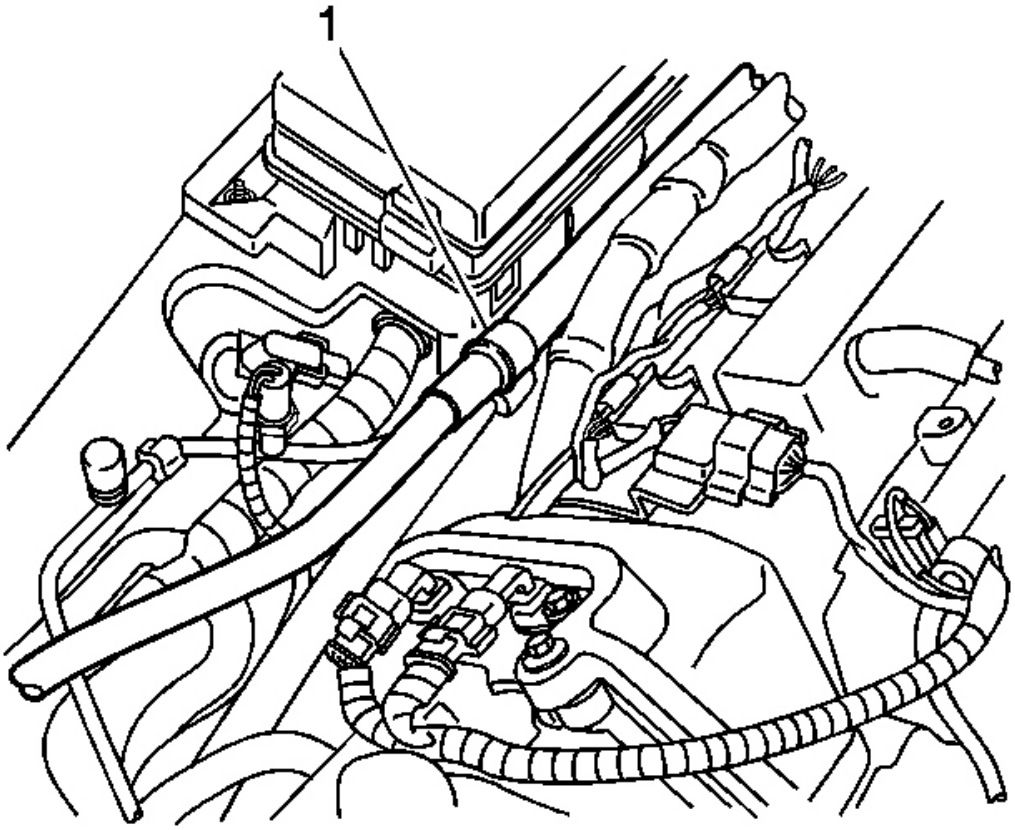

Fig. 139: View Of Underhood Junction Box Retainer Clip
Courtesy of GENERAL MOTORS CORP.

4. Connect the heater inlet hose to the underhood junction box retainer clip (1).
5. Connect the heater inlet hose to the heater pipe assembly.

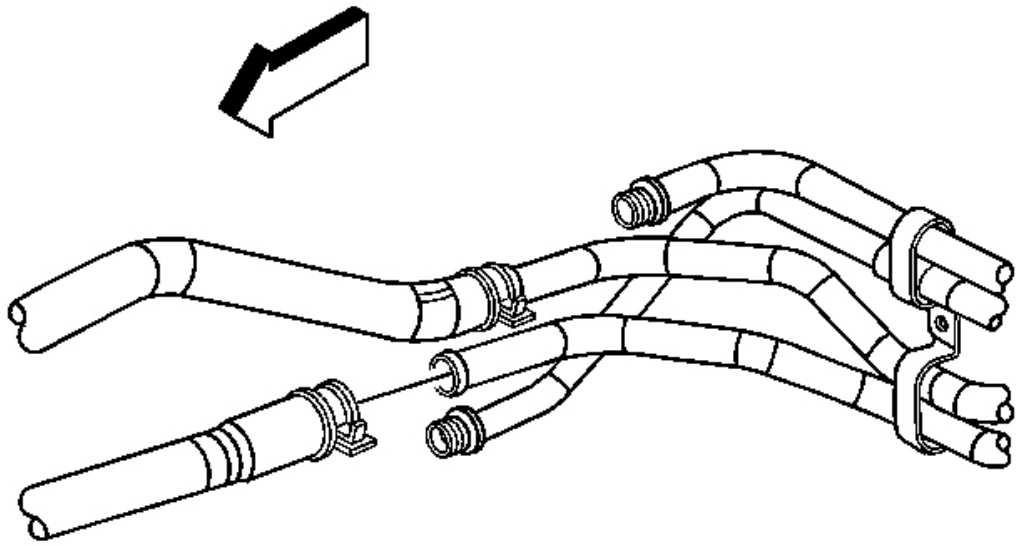

Fig. 140: Heater Inlet Hose Clamp At Heater Pipe Assembly
Courtesy of GENERAL MOTORS CORP.

6. Engage tension on the heater inlet hose clamp at the heater pipe assembly.
7. Install the battery. Refer to **Battery Replacement** in Engine Electrical.
8. Fill the cooling system. Refer to **Draining and Filling Cooling System** in Engine Cooling.

HEATER PIPES REPLACEMENT

Tools Required

J 38185 Spring Hose Clamp Pliers

Removal Procedure

1. Recover the refrigerant from the A/C system. Refer to **Refrigerant Recovery and Recharging**.
2. Drain the cooling system. Refer to **Draining and Filling Cooling System** in Engine Cooling.
3. Remove the rear evaporator line assembly. Refer to **Evaporator Tube Replacement - Rear**.

4. Release and reposition the heater inlet and outlet hose clamps using the**J 38185** .

IMPORTANT: Cap or plug the cooling components to prevent system contamination.

5. Separate the heater hoses from heater pipes.
6. Cap or plug the open heater hoses.

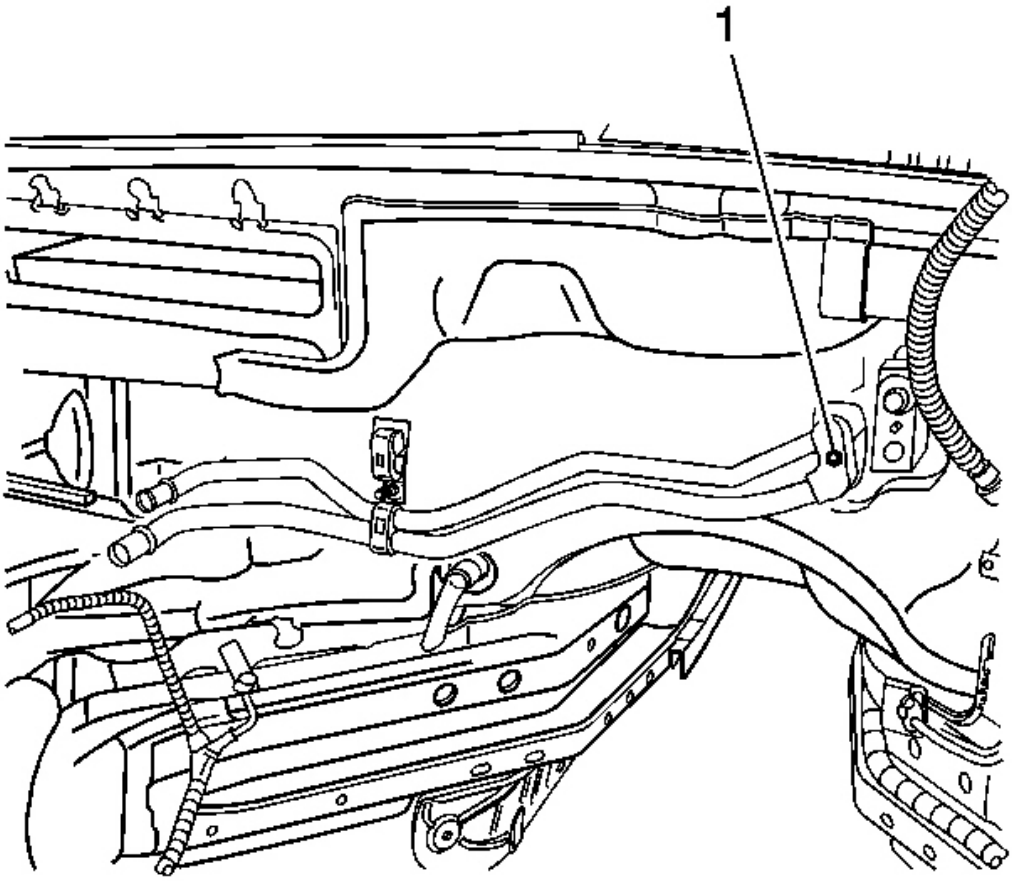

Fig. 141: Heater Core Retaining Bolt
Courtesy of GENERAL MOTORS CORP.

7. Remove the heater pipe assembly to heater core retaining bolt (1).

NOTE: **Do not apply excessive force on the heater core pipes during hose removal. Applying excessive force on the heater core pipes may damage the heater core pipes.**

8. Disconnect the heater pipe assembly from the heater pipe bracket retainer.

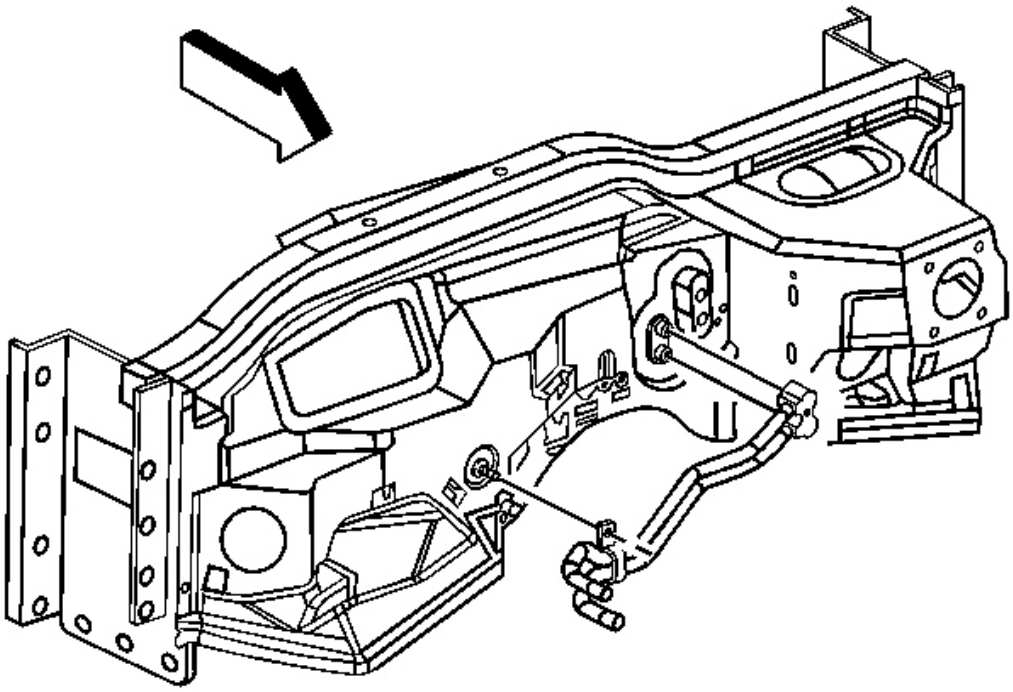

Fig. 142: Identifying Heater Pipe Assembly
Courtesy of GENERAL MOTORS CORP.

9. Disconnect the heater pipe assembly from the heater core.
10. Remove the heater pipe assembly from the vehicle.
11. Remove and discard the sealing washers.
12. Cap or plug the heater core.

Installation Procedure

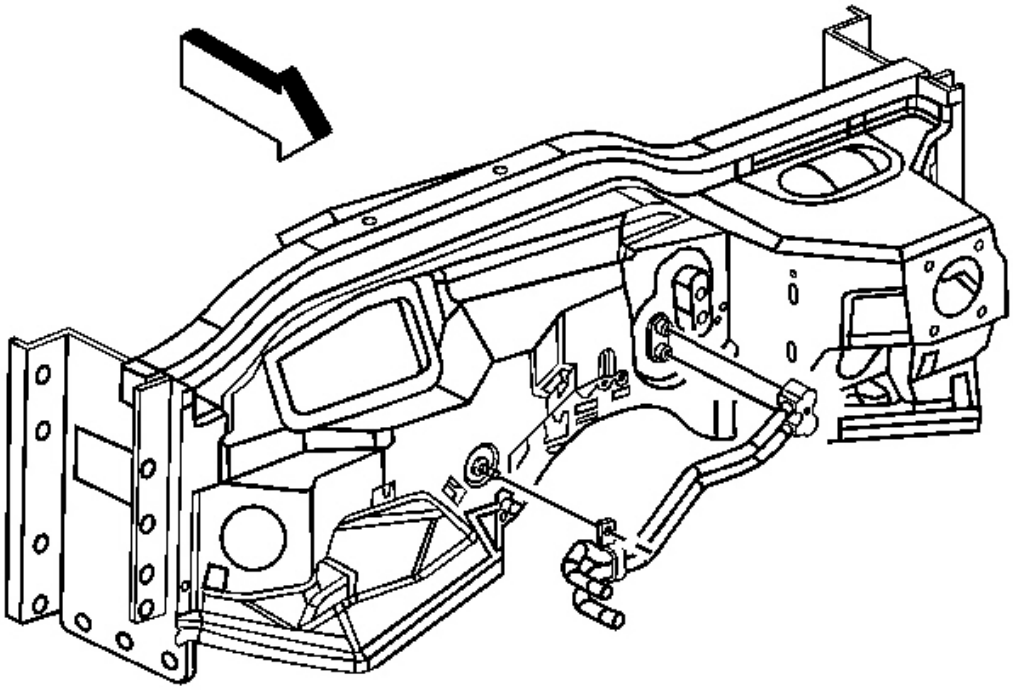

Fig. 143: Identifying Heater Pipe Assembly
Courtesy of GENERAL MOTORS CORP.

1. Remove the cap or plug from the heater core.
2. Using a lint-free clean, dry cloth, carefully clean the sealing surfaces of the heater pipe assembly and the heater core.
3. Lightly coat the new seal washers with coolant.
4. Carefully slide the new sealing washers onto the heater pipe assembly until properly seated.
5. Install the heater pipe assembly into position in the vehicle.
6. Install the heater pipe assembly to the heater core.

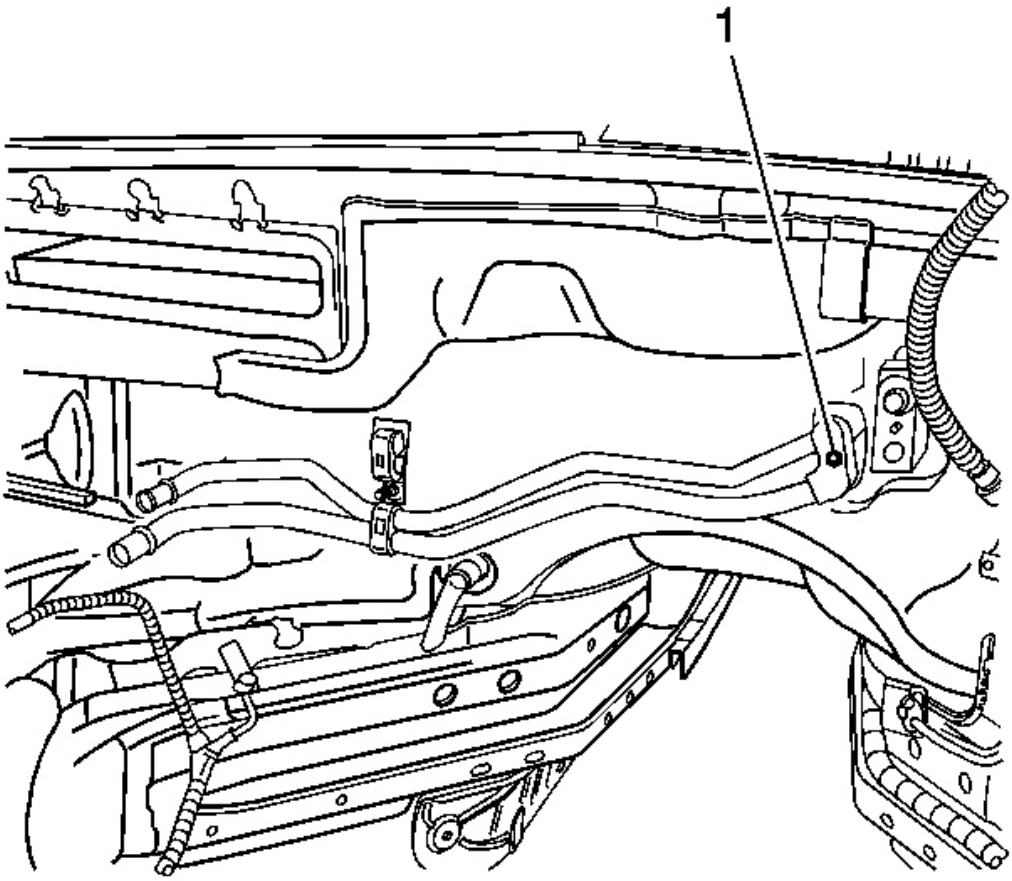

Fig. 144: Heater Core Retaining Bolt
Courtesy of GENERAL MOTORS CORP.

NOTE: Refer to Fastener Notice in Cautions and Notices.

7. Install the heater pipe assembly retaining bolt (1).

   Tighten: Tighten the bolt to 14 N.m (10 lb ft).

8. Remove cap or plug from the heater hoses.
9. Connect heater inlet and outlet hoses to the heater pipe assembly.
10. Install the heater hose clamps into position using the **J 38185** .
11. Install the rear evaporator line assembly. Refer to **Evaporator Tube Replacement - Rear**.

12. Fill the cooling system. Refer to **Draining and Filling Cooling System** in Engine Cooling.

PASSENGER COMPARTMENT AIR FILTER REPLACEMENT

Removal Procedure

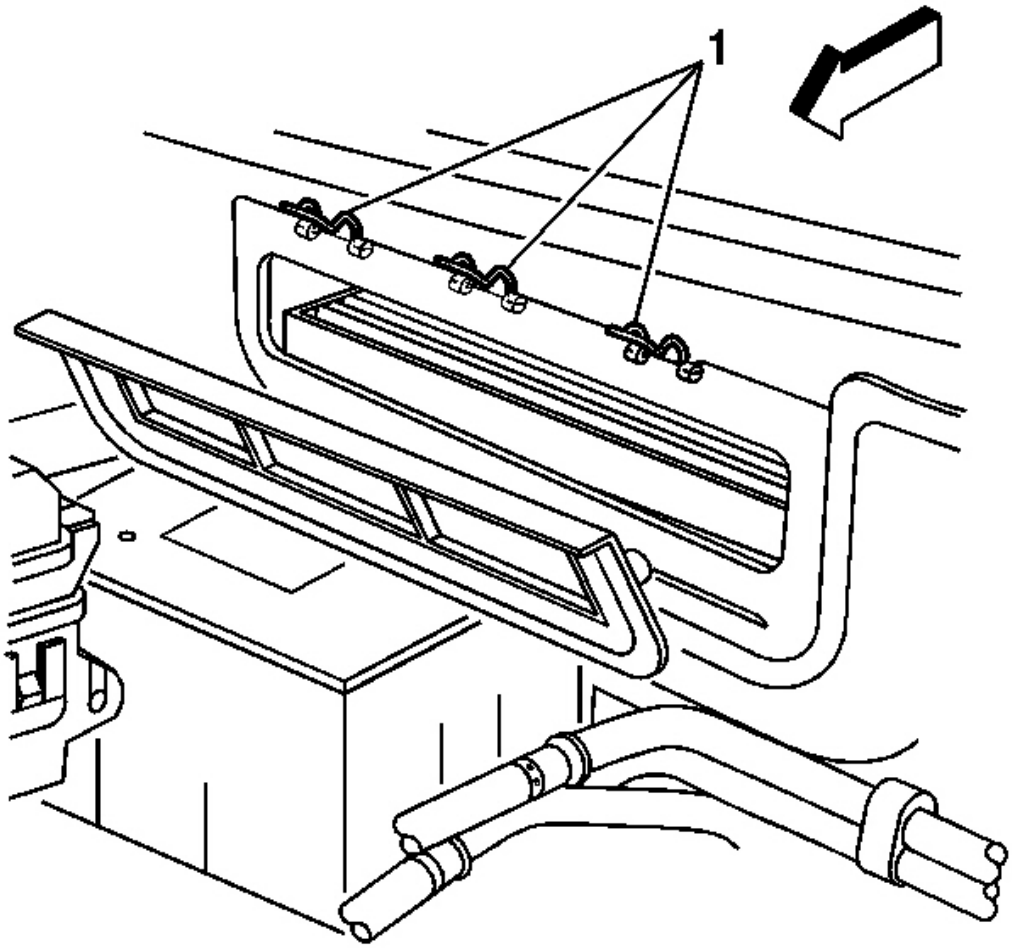

Fig. 145: Passenger Compartment Air Filter Housing Cover & Retainer Clips
Courtesy of GENERAL MOTORS CORP.

1. Disengage the passenger compartment air filter housing cover retainer clips (1).
2. Remove the passenger compartment air filter housing cover.

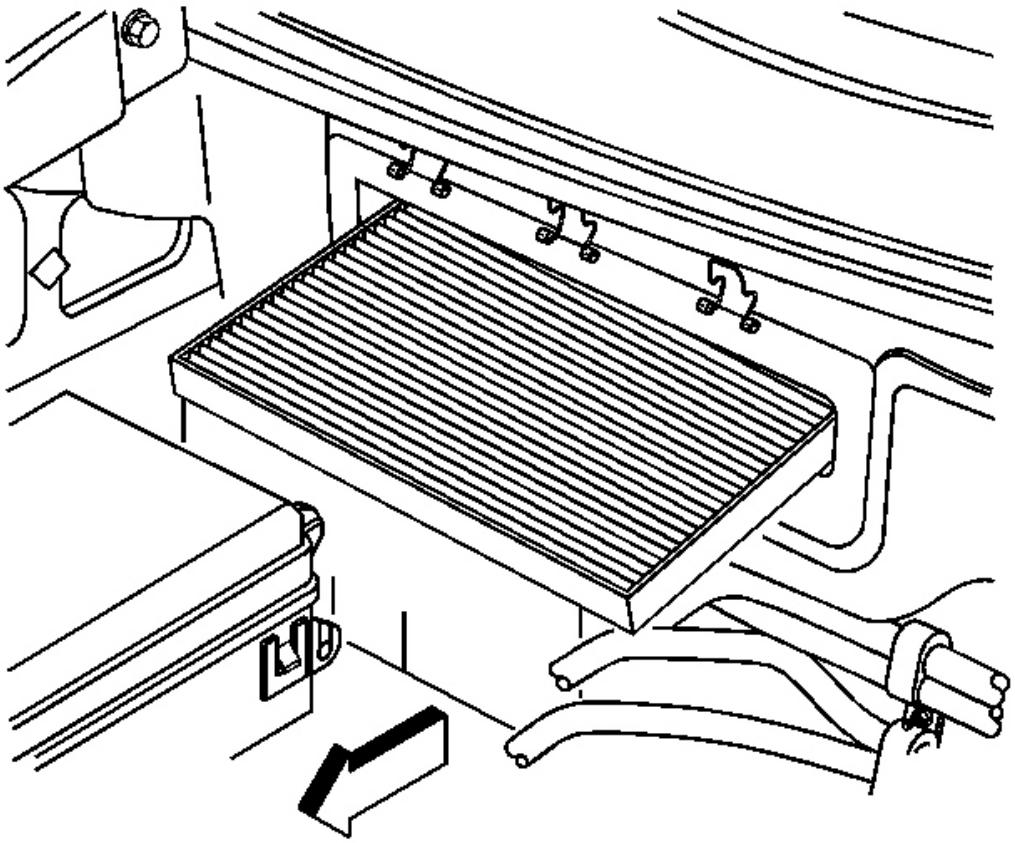

Fig. 146: Passenger Compartment Air Filter
Courtesy of GENERAL MOTORS CORP.

3. Remove the passenger compartment air filter from the housing.

Installation Procedure

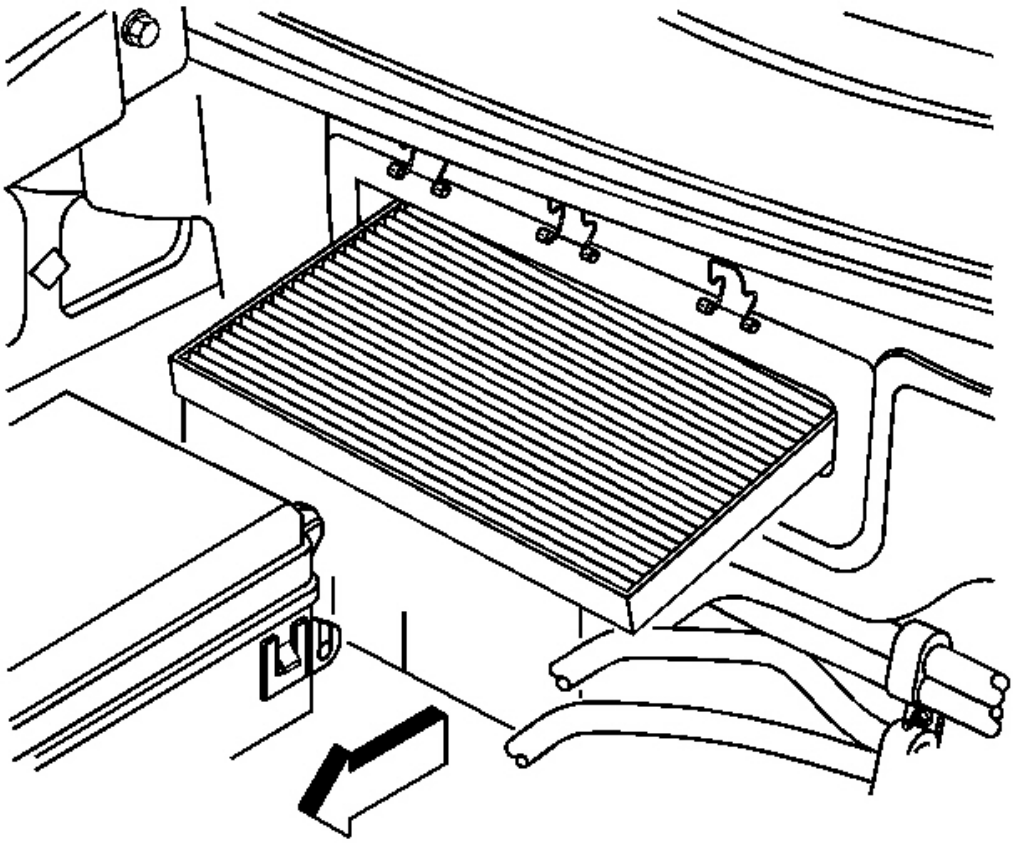

Fig. 147: Passenger Compartment Air Filter
Courtesy of GENERAL MOTORS CORP.

IMPORTANT: Note the orientation of the passenger compartment air filter when installing into the air filter housing.
Ensure that the passenger compartment air filter fully seated into the passenger compartment air filter housing.

1. Install the passenger compartment air filter into the housing.

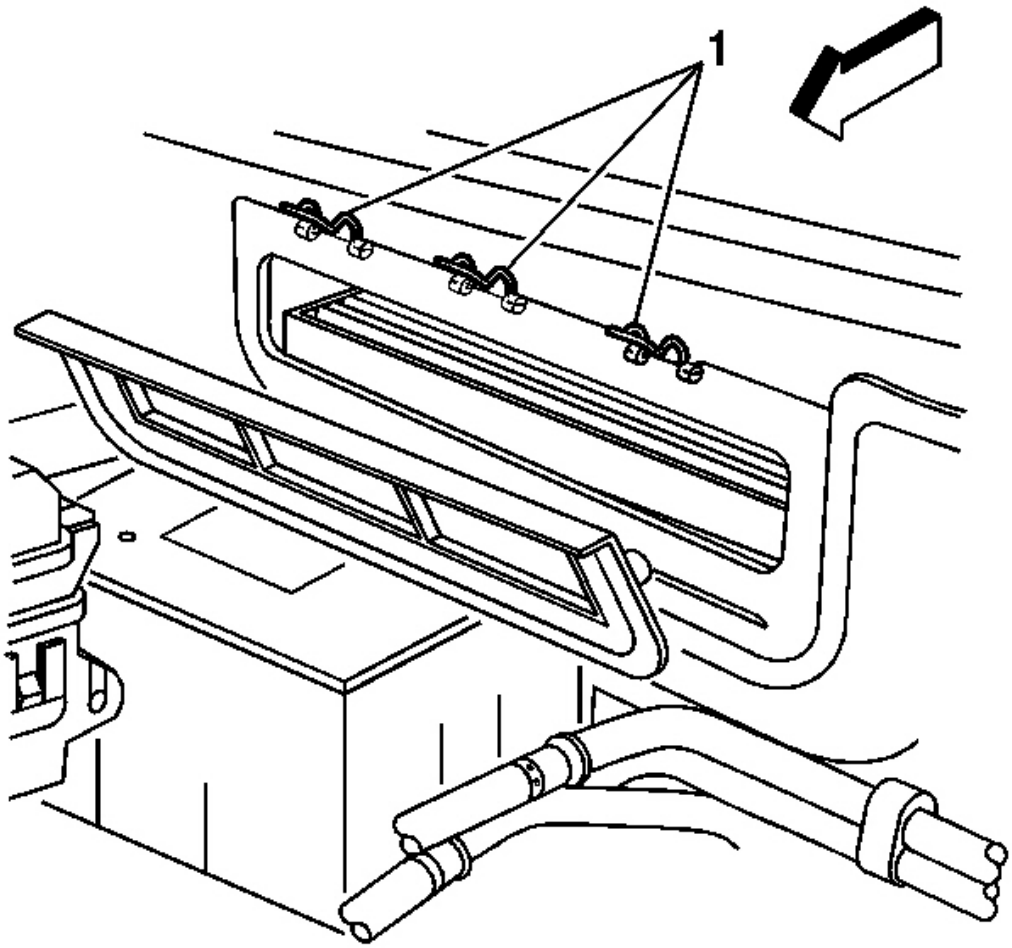

Fig. 148: Passenger Compartment Air Filter Housing Cover & Retainer Clips
Courtesy of GENERAL MOTORS CORP.

2. Install the passenger compartment air filter housing cover.
3. Engage the passenger compartment air filter housing cover retainer clips (1).

AIR INLET ASSEMBLY REPLACEMENT

Tools Required

J 39400-A Halogen Leak Detector

Removal Procedure

1. Recover the refrigerant from the A/C system. Refer to **Refrigerant Recovery and Recharging**.
2. Drain the cooling system. Refer to **Draining and Filling Cooling System** in Engine Cooling.
3. Remove the heater pipe assembly. Refer to **Heater Pipes Replacement**.
4. Remove the engine wire harness bracket bolt.
5. Disconnect engine wire harness electrical connector and reposition aside.

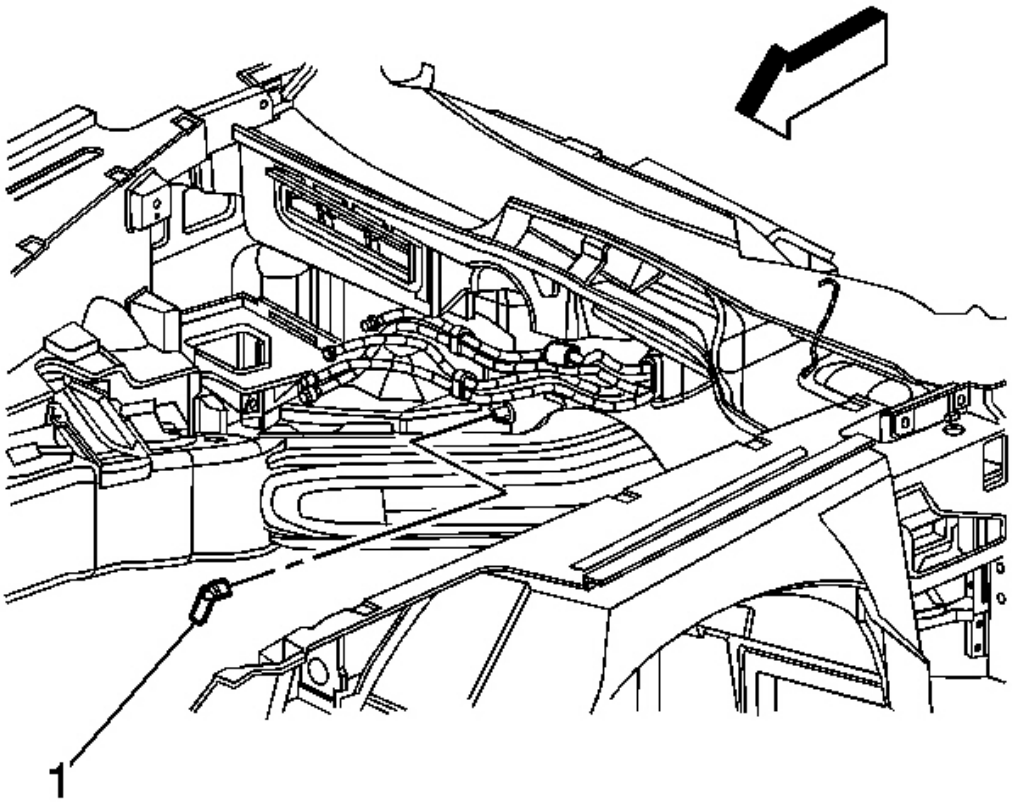

Fig. 149: Identifying Evaporator Drain Tube At HVAC Module
Courtesy of GENERAL MOTORS CORP.

6. Remove the evaporator drain tube (1) from the HVAC module.

7. Remove the I/P assembly. Refer to **Instrument Panel (I/P) Carrier Replacement** in Instrument Panel, Gages and Console.

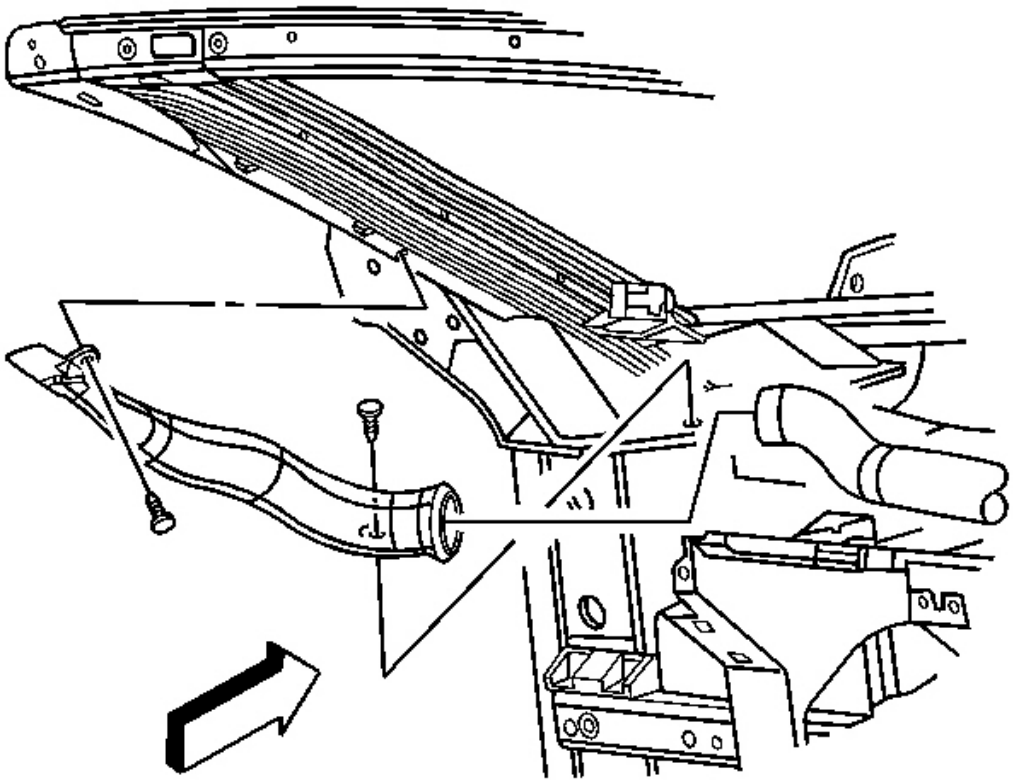

Fig. 150: Defogger Duct & Components
Courtesy of GENERAL MOTORS CORP.

8. Remove the retainers from the upper defogger duct on the left side window.
9. Disconnect and remove the upper defogger outlet duct.

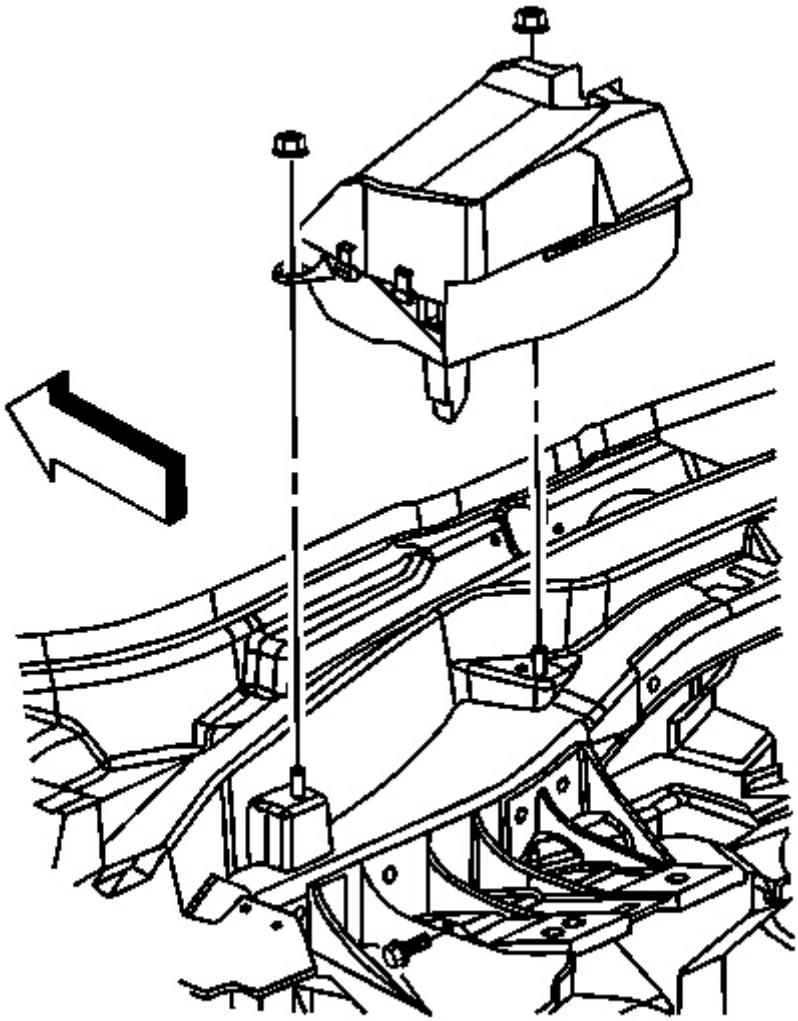

Fig. 151: View Of HUD
Courtesy of GENERAL MOTORS CORP.

10. Disconnect the HUD electrical connector.
11. Remove the HUD retaining nuts.
12. Remove the screw that secures the HUD to the steering column bracket.

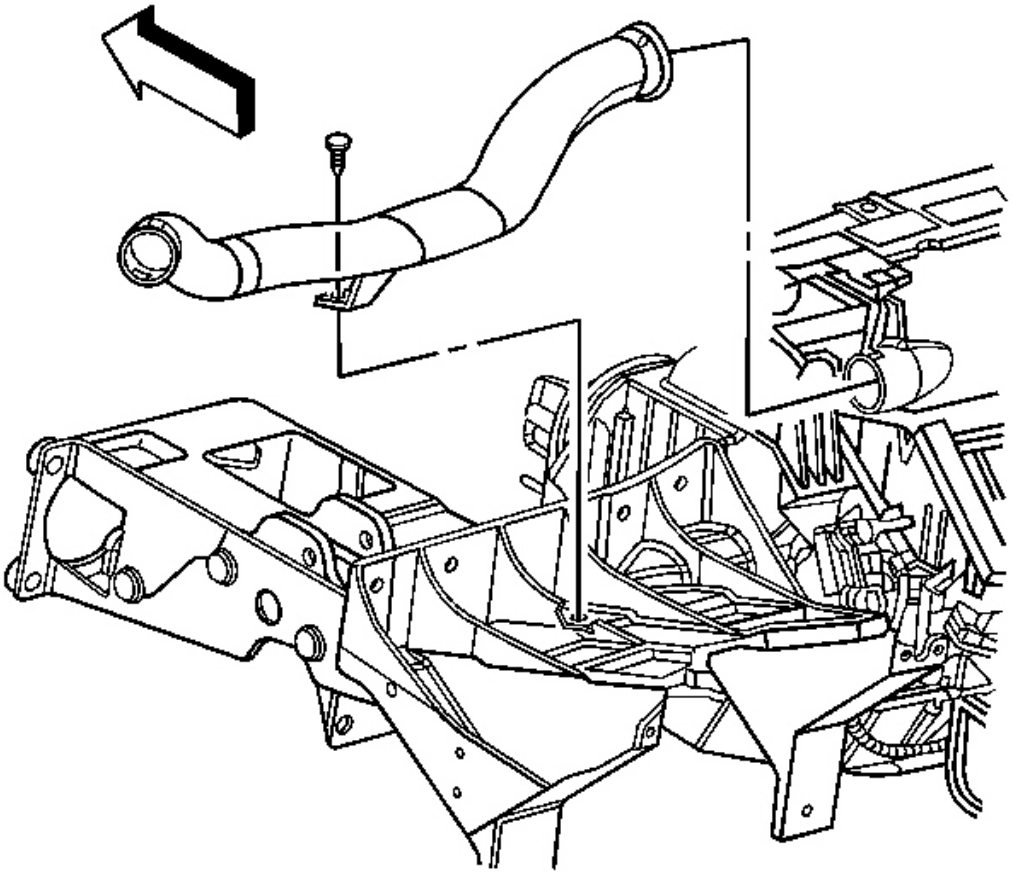

Fig. 152: Identifying Lower Defogger Outlet Duct & Retainer
Courtesy of GENERAL MOTORS CORP.

13. Remove the retainer from the lower defogger outlet duct.
14. Disconnect and remove the outlet duct from the defroster duct.

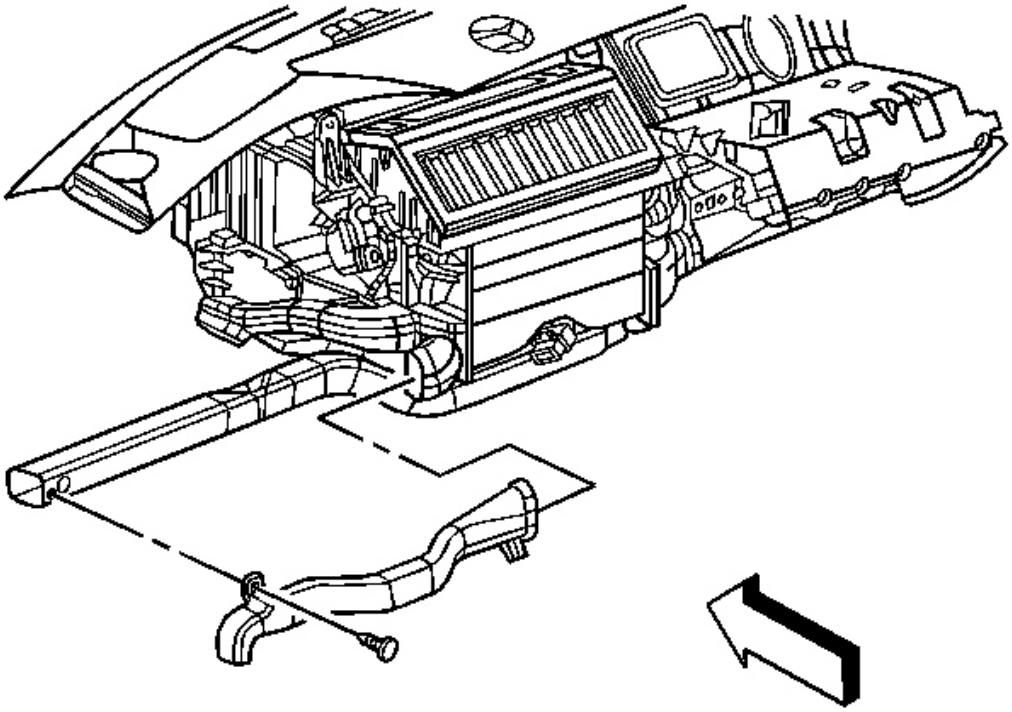

Fig. 153: Identifying Floor Air Outlet Duct & Retainer At I/P Beam
Courtesy of GENERAL MOTORS CORP.

15. Remove the retainer securing the floor air outlet duct to the lower I/P beam.
16. Disconnect the floor air outlet duct from the rear floor air outlet duct.
17. Remove the floor air outlet duct.

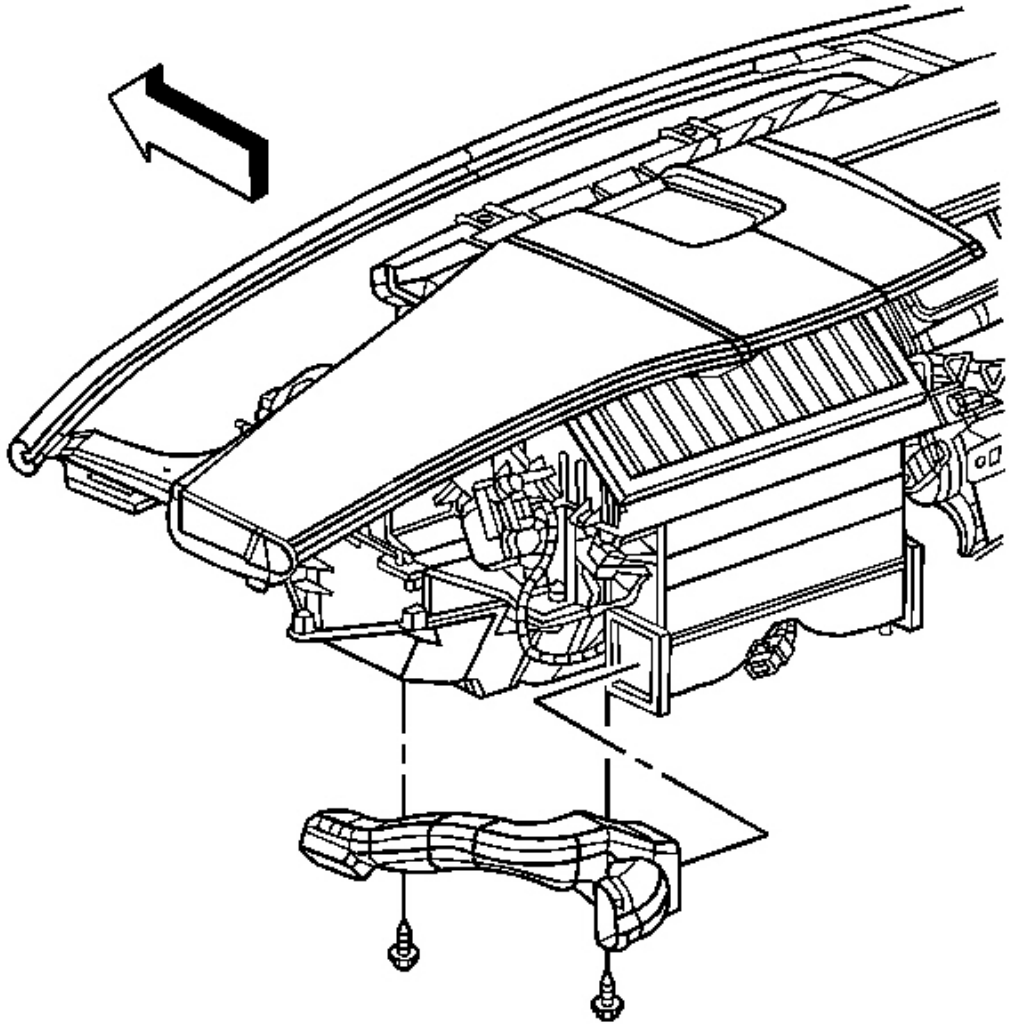

Fig. 154: Floor Air Outlet Duct & Retaining Screws
Courtesy of GENERAL MOTORS CORP.

18. Remove the retaining screws from the floor air outlet duct.
19. Remove the outlet duct.

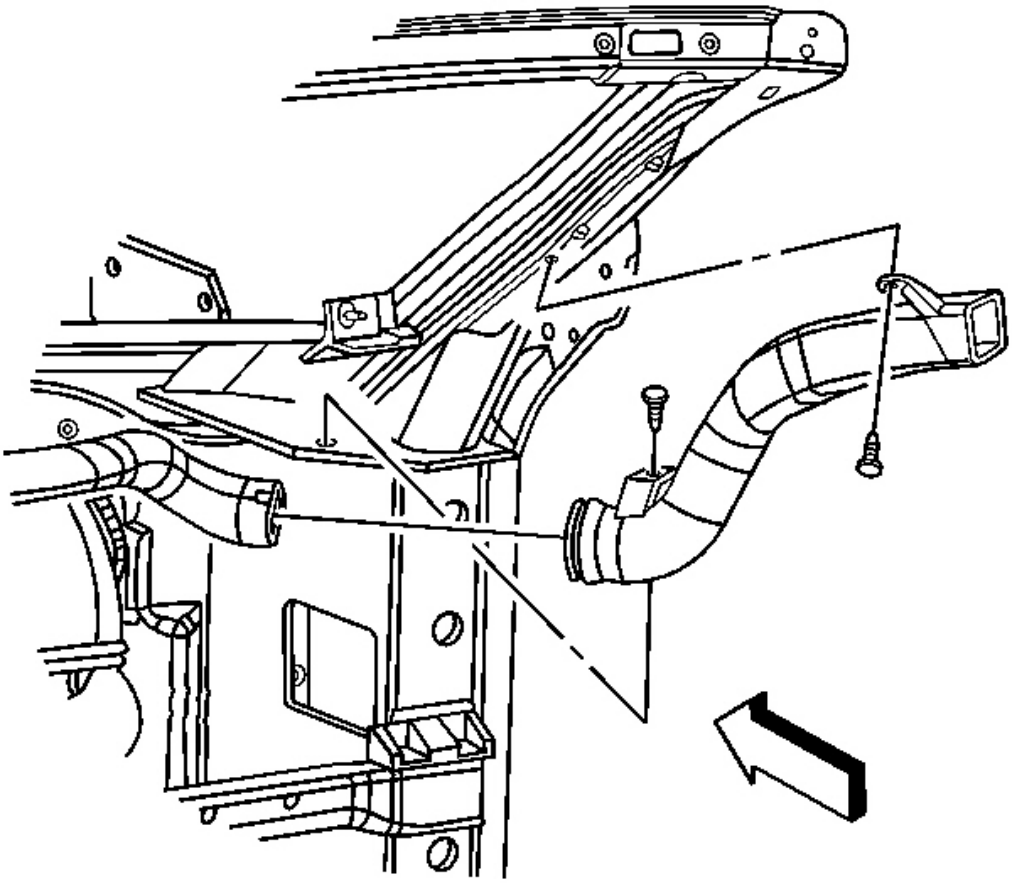

Fig. 155: Defogger Outlet Ducts & Retainers
Courtesy of GENERAL MOTORS CORP.

20. Remove the retainers from the upper outlet duct on the right side window defogger.
21. Disconnect and remove the defogger upper outlet duct from the defogger lower outlet duct.

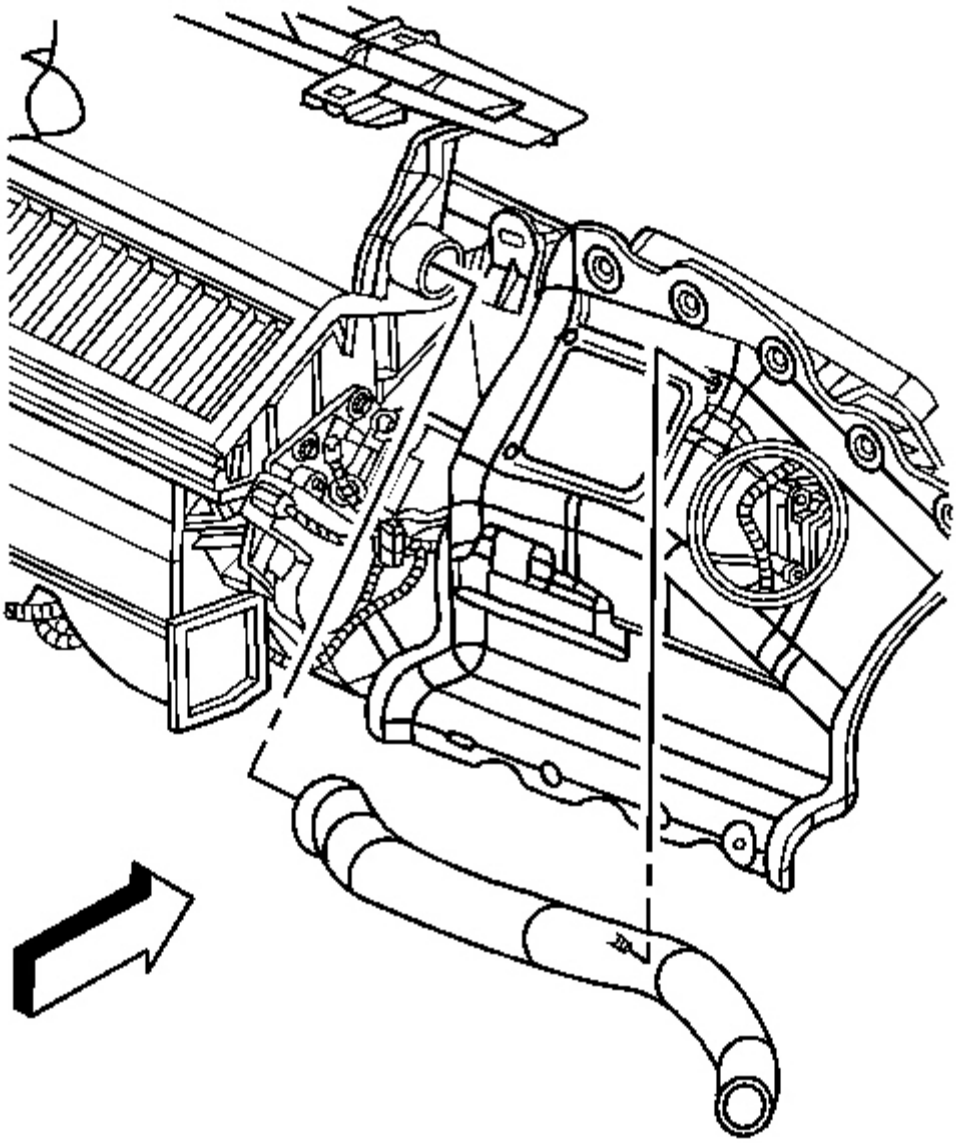

Fig. 156: Identifying Defogger Lower Outlet Duct
Courtesy of GENERAL MOTORS CORP.

22. Disconnect the defogger lower outlet duct from the knee bolster bracket.
23. Disconnect the defogger lower outlet duct from the defroster duct.
24. Remove the defogger lower outlet duct.

25. Remove the knee bolster bracket. Refer to **Knee Bolster Bracket Replacement - Right** in Instrument Panel, Gages and Console.

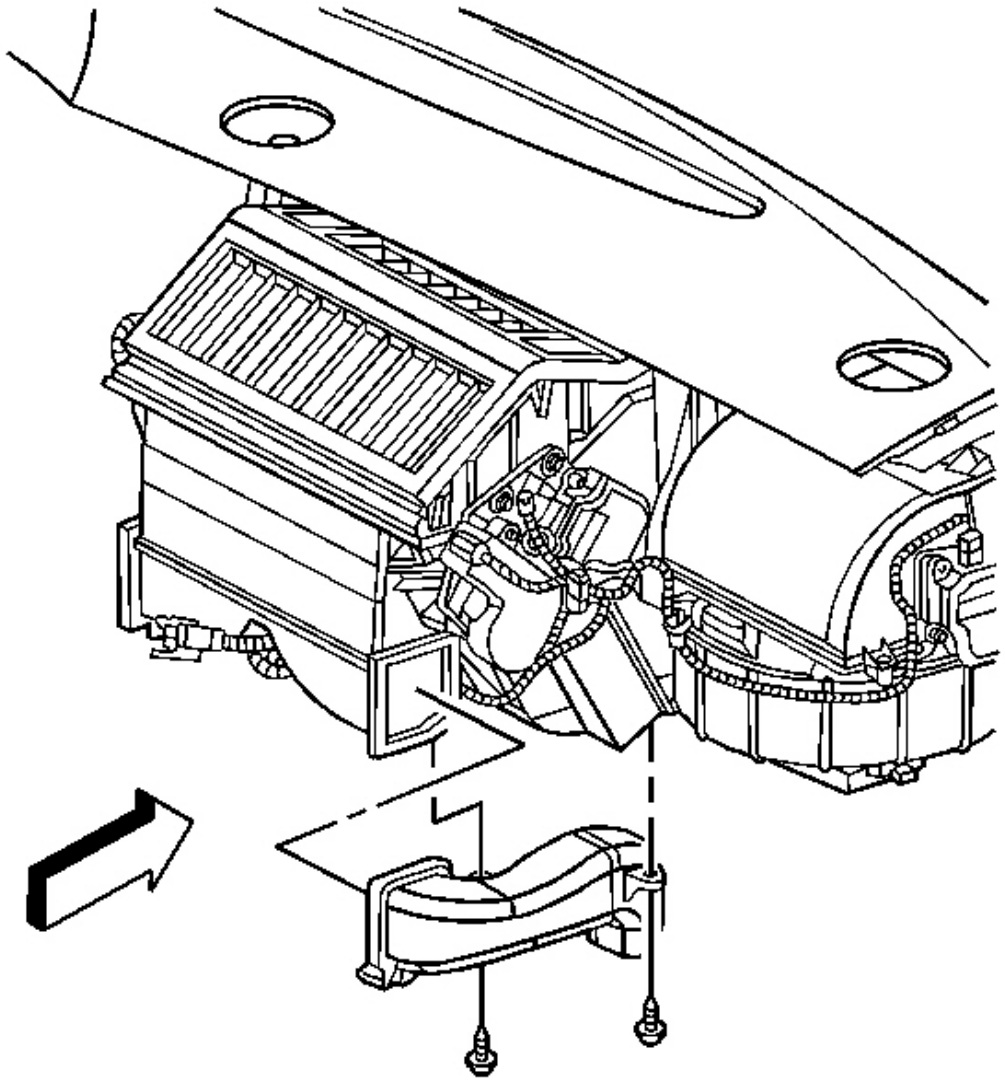

Fig. 157: Air Outlet Duct & Retaining Screws
Courtesy of GENERAL MOTORS CORP.

26. Remove the retaining screws from the floor air outlet duct.
27. Remove the air outlet duct.

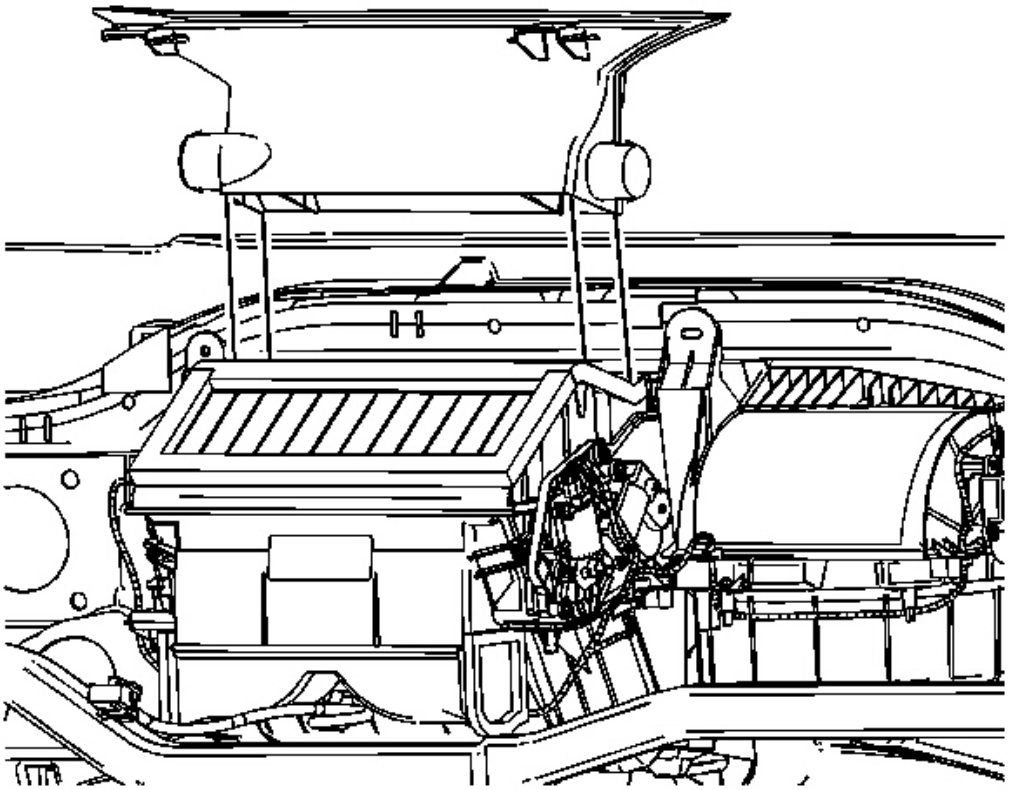

Fig. 158: Defroster Duct
Courtesy of GENERAL MOTORS CORP.

28. Remove the defroster duct retaining screws.
29. Remove the defroster duct.
30. Disconnect the blower motor electrical connector.

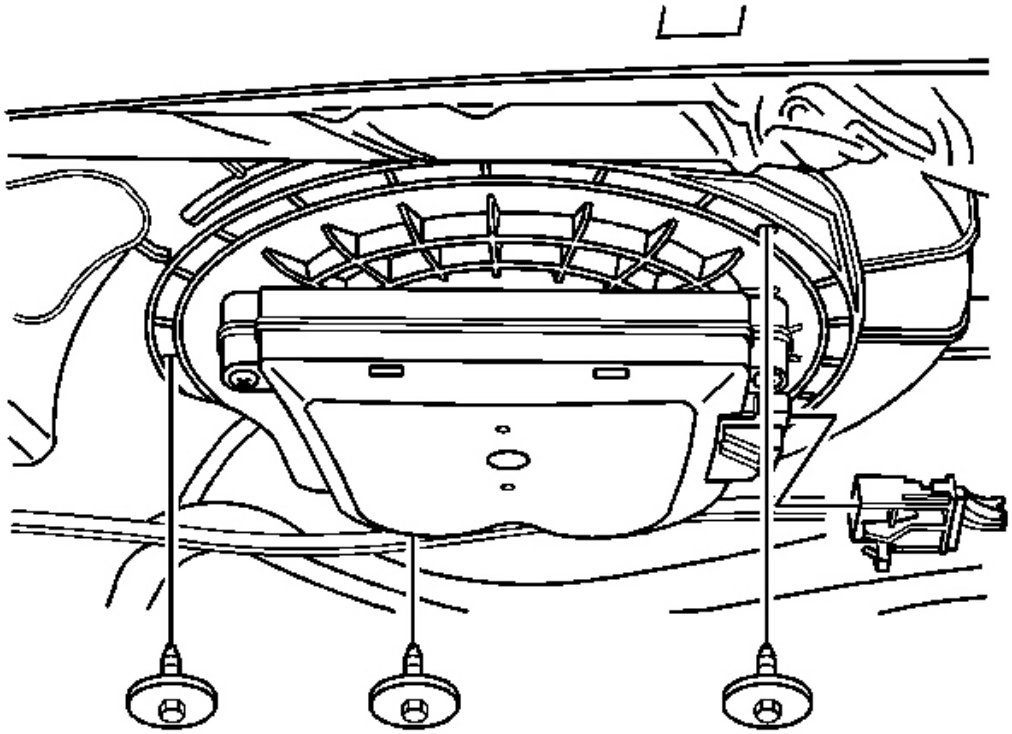

Fig. 159: Blower Motor & Retaining Screws At HVAC Module
Courtesy of GENERAL MOTORS CORP.

31. Remove the blower motor retaining screws.
32. Remove the blower motor from the HVAC module.

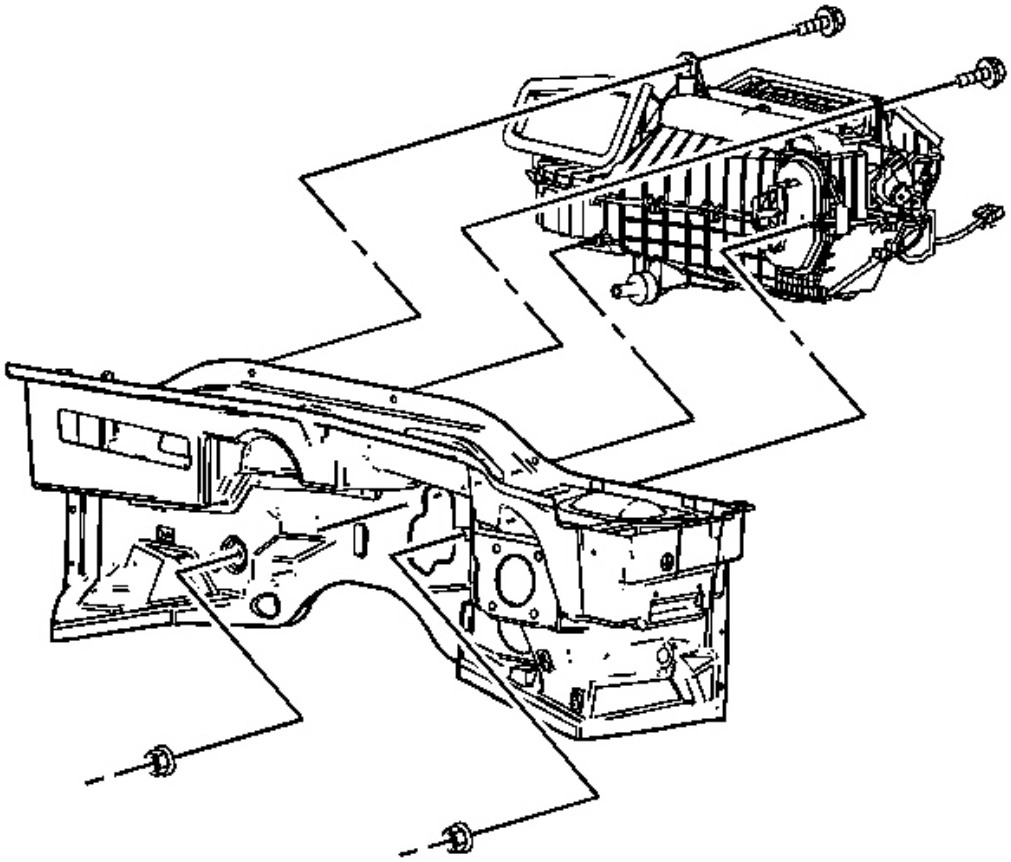

Fig. 160: HVAC Module, I/P Cross Vehicle Beam & Components
Courtesy of GENERAL MOTORS CORP.

33. Remove the retaining and sealing nuts from the cowl.
34. Remove the retaining bolts from the upper I/P cross vehicle beam.

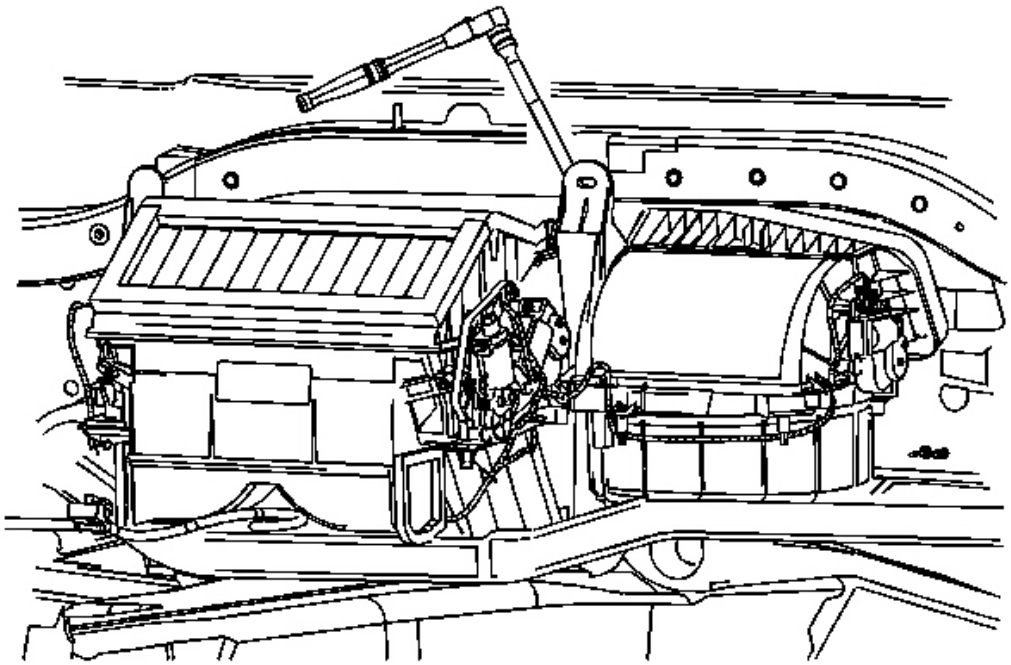

Fig. 161: Identifying Front LH Recirculation Housing Retaining Screw
Courtesy of GENERAL MOTORS CORP.

IMPORTANT: Reposition the HVAC module rearward to access the front LH recirculation housing screw.
The front LH retaining tab of the recirculation housing is slotted.

35. Loosen the front LH recirculation housing retaining screw.

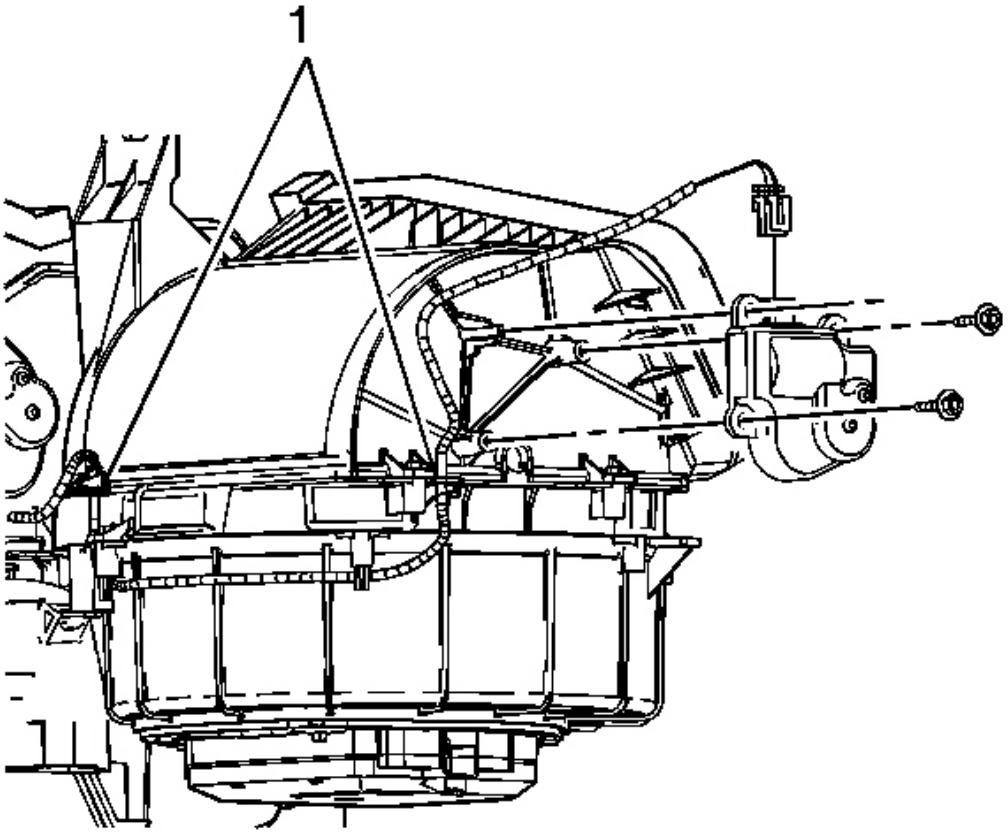

Fig. 162: Recirculation Actuator & Components
Courtesy of GENERAL MOTORS CORP.

36. Disconnect the recirculation actuator electrical connector.
37. Remove the recirculation actuator screws.
38. Remove the recirculation actuator.
39. Disconnect the HVAC module wiring harness from the recirculation housing (1).

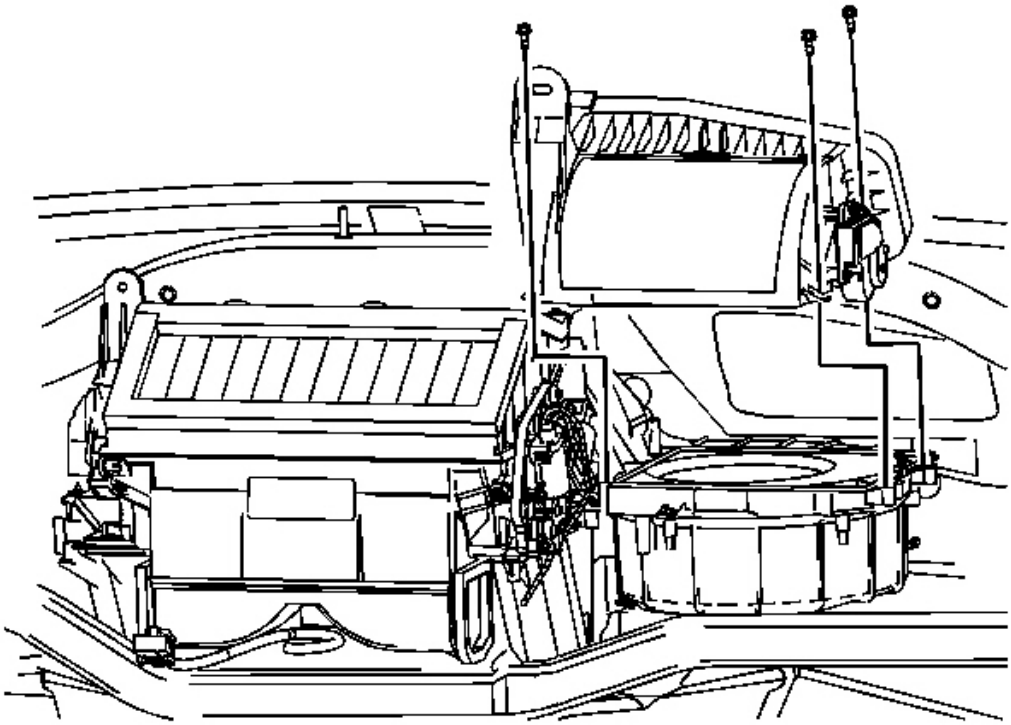

Fig. 163: Identifying Recirculation Housing Retaining Screws
Courtesy of GENERAL MOTORS CORP.

40. Remove the remaining recirculation housing retaining screws.
41. Remove the recirculation housing from the HVAC module.

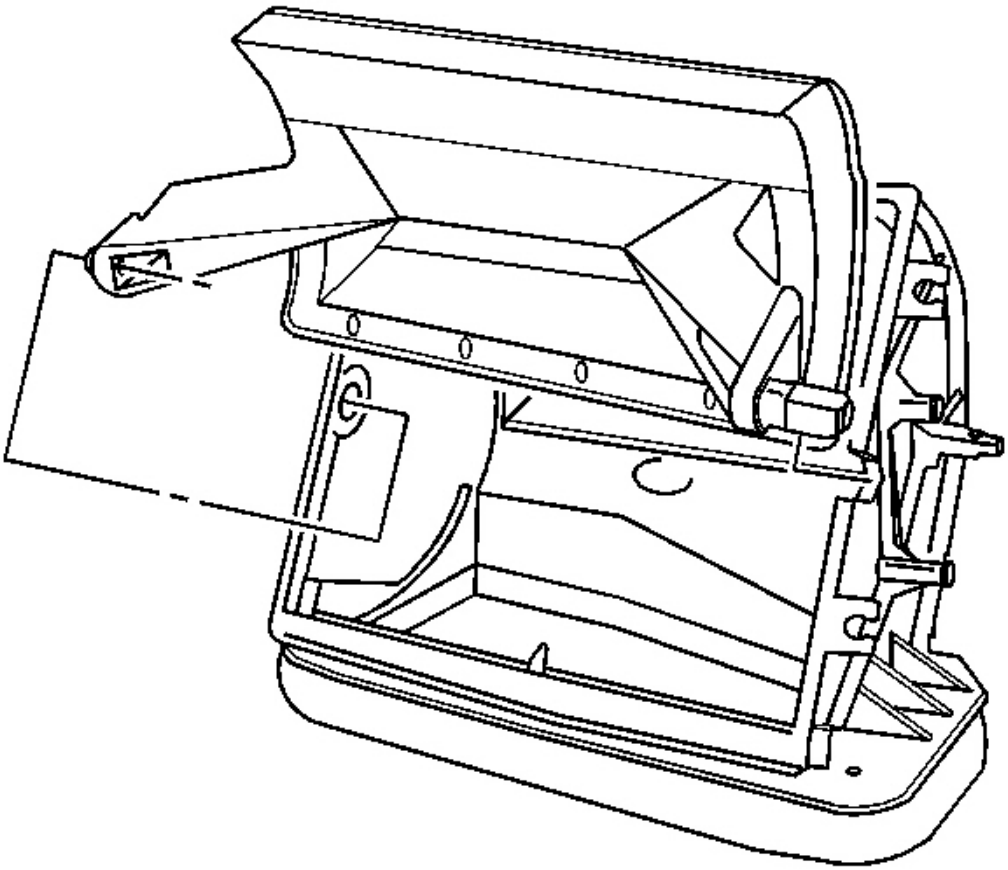

Fig. 164: Identifying Air Inlet Door & Recirculation Housing
Courtesy of GENERAL MOTORS CORP.

42. Disconnect and remove the air inlet door from the recirculation housing.

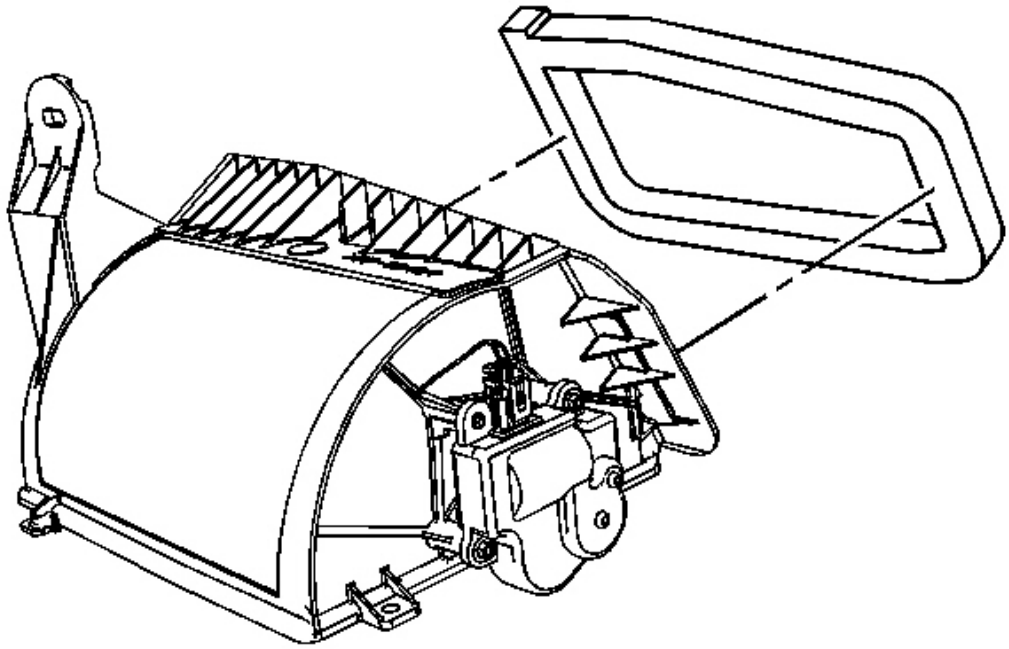

Fig. 165: Foam Seal & Recirculation Housing
Courtesy of GENERAL MOTORS CORP.

43. Remove and discard the foam seal from the recirculation housing.

Installation Procedure

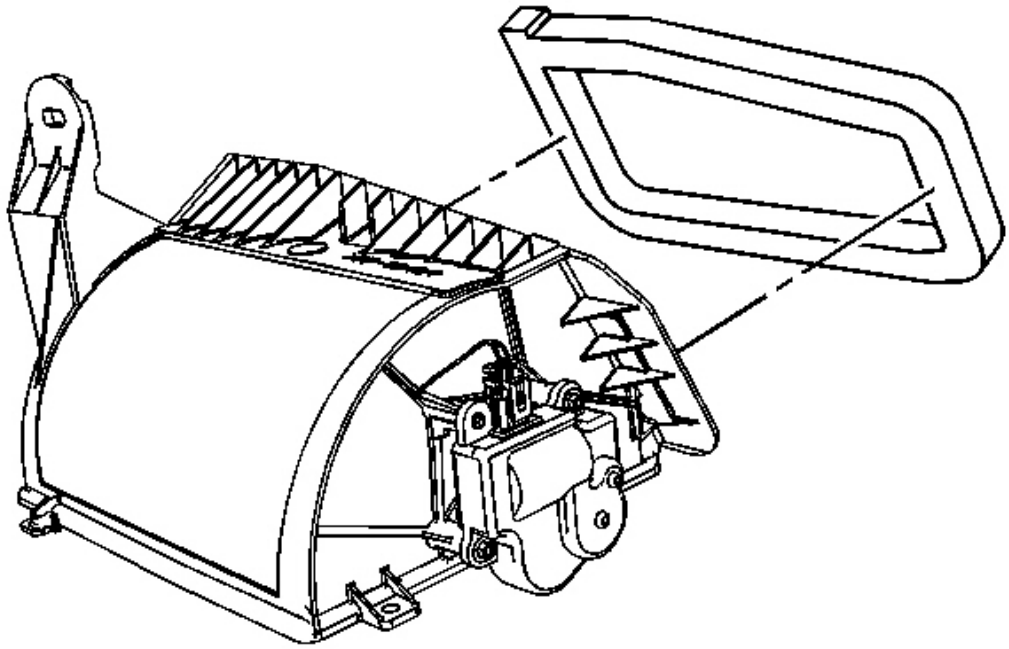

Fig. 166: Foam Seal & Recirculation Housing
Courtesy of GENERAL MOTORS CORP.

1. Install a new foam seal to the recirculation housing.

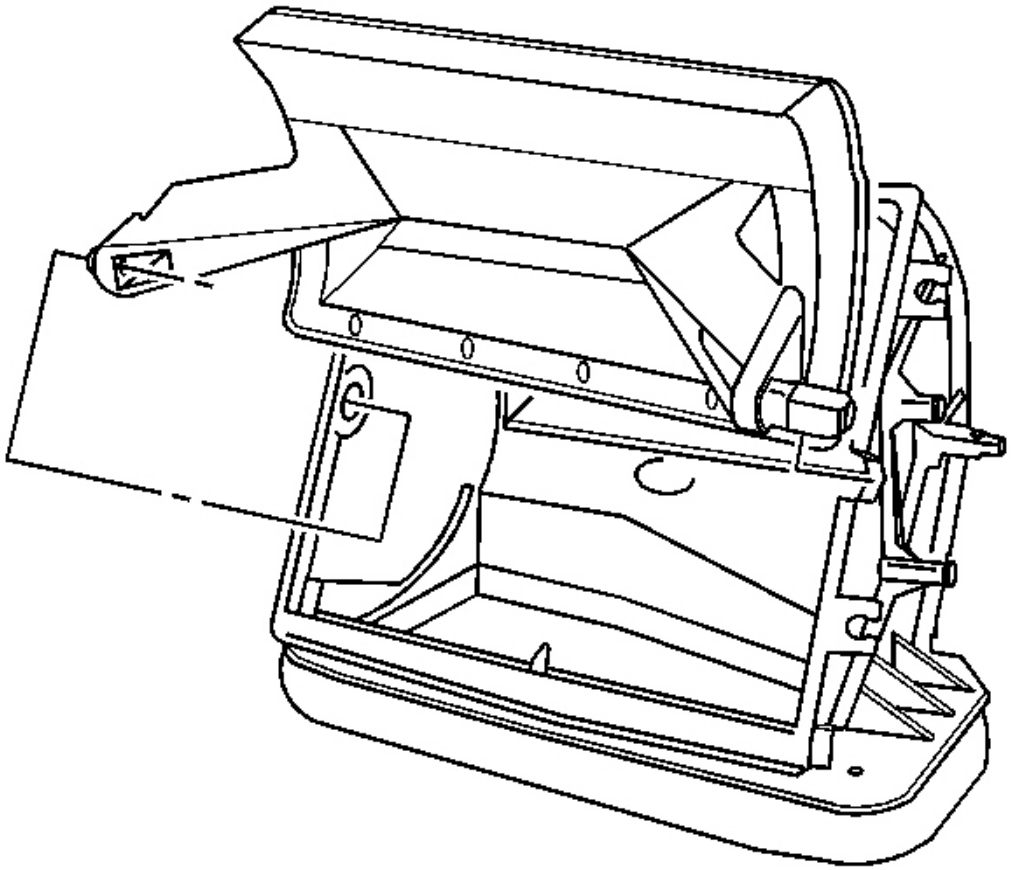

Fig. 167: Identifying Air Inlet Door & Recirculation Housing
Courtesy of GENERAL MOTORS CORP.

2. Install the air inlet door to the recirculation housing.
3. Install the recirculation housing to the HVAC module.

NOTE: Refer to Fastener Notice in Cautions and Notices.

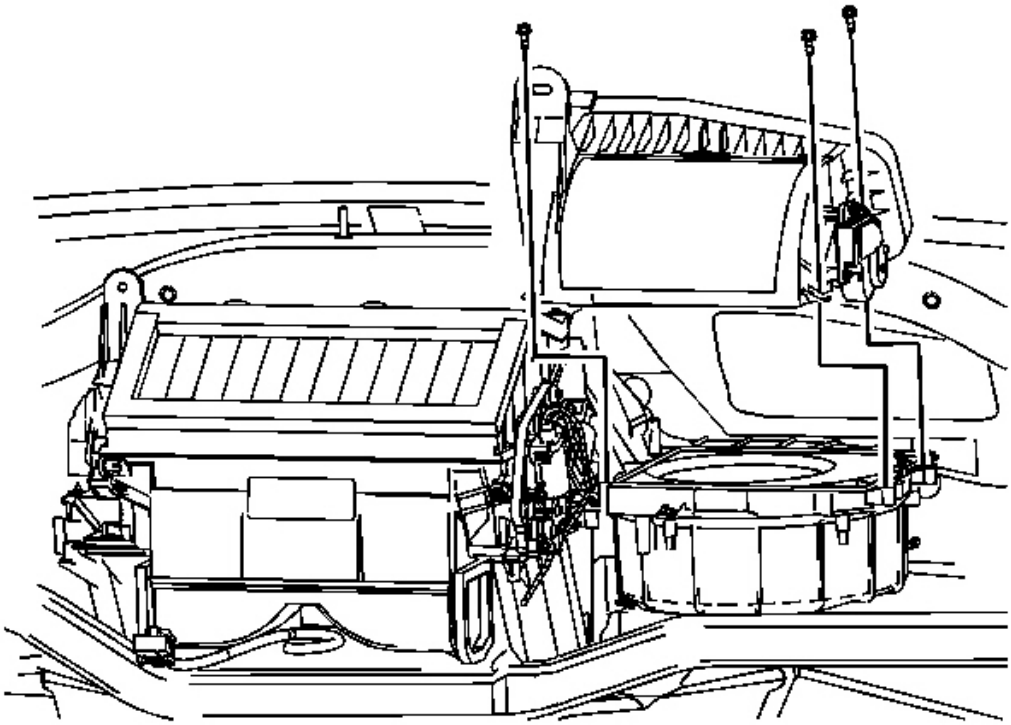

Fig. 168: Identifying Recirculation Housing Retaining Screws
Courtesy of GENERAL MOTORS CORP.

4. Install the recirculation housing retaining screws.

   Tighten: Tighten the screws to 1.6 N.m (14 lb in).

5. Connect the HVAC module wiring harness to the recirculation housing (1).
6. Install the recirculation actuator.
7. Install the recirculation actuator screws.

   Tighten: Tighten the screws to 1.6 N.m (14 lb in).

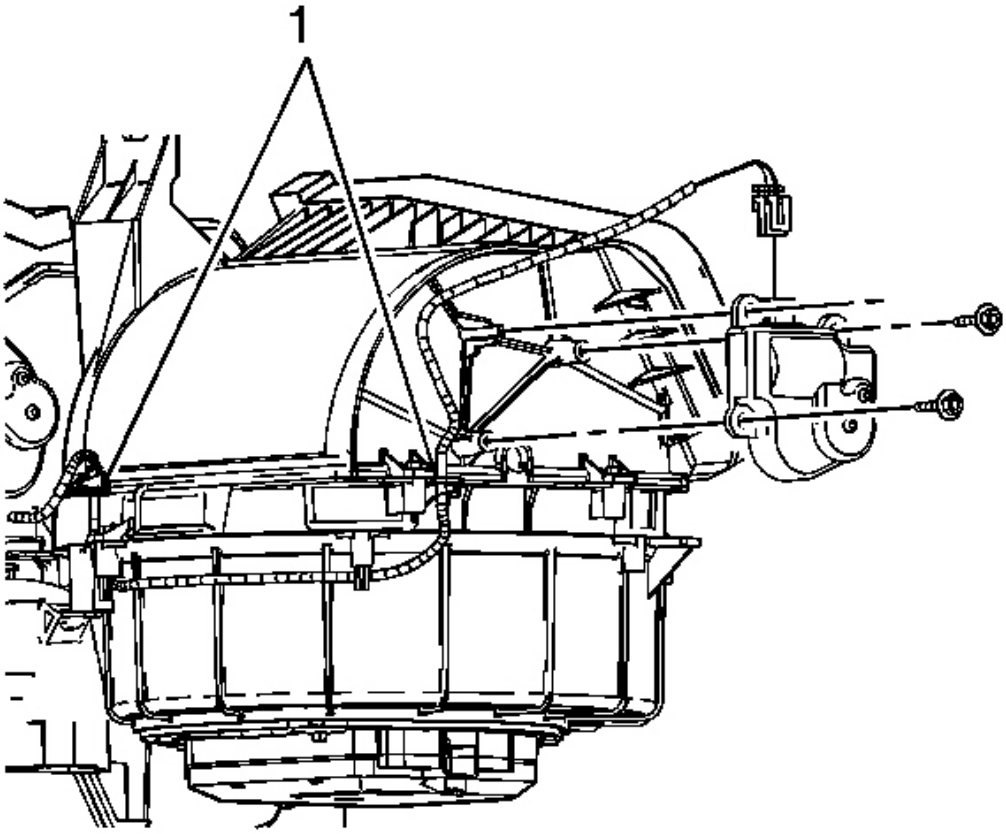

Fig. 169: Recirculation Actuator & Components
Courtesy of GENERAL MOTORS CORP.

8. Connect the recirculation actuator electrical connector.

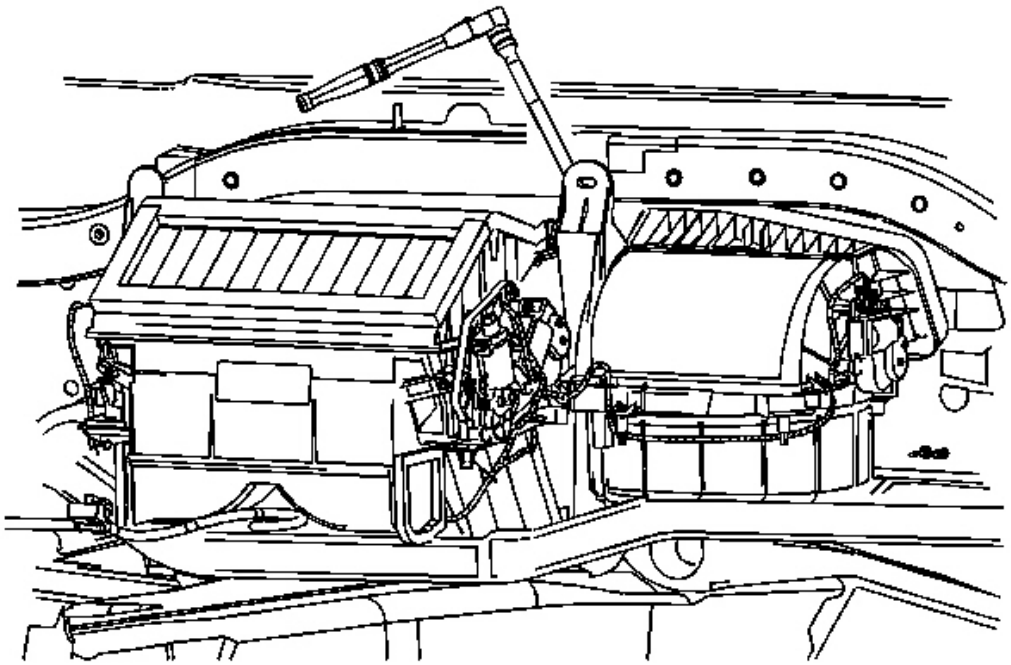

Fig. 170: Identifying Front LH Recirculation Housing Retaining Screw
Courtesy of GENERAL MOTORS CORP.

9. Tighten the front LH recirculation housing retaining screw.

   Tighten: Tighten the screw to 1.6 N.m (14 lb in).

IMPORTANT: In necessary, gently rotate the HVAC module forward to engage the HVAC module studs through the corresponding holes on the cowl.

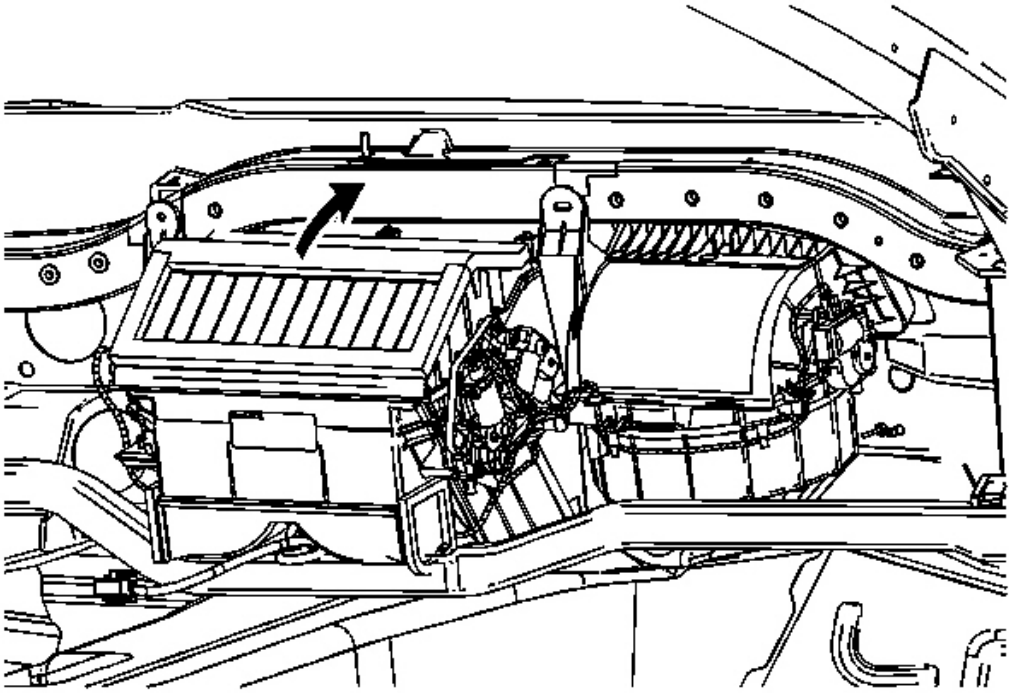

Fig. 171: Aligning Components To Corresponding Openings On The Cowl
Courtesy of GENERAL MOTORS CORP.

10. Align the following components to the corresponding openings on the cowl:
    - The heater core joint fitting
    - The evaporator joint fitting
    - The HVAC module drain
    - The HVAC module studs

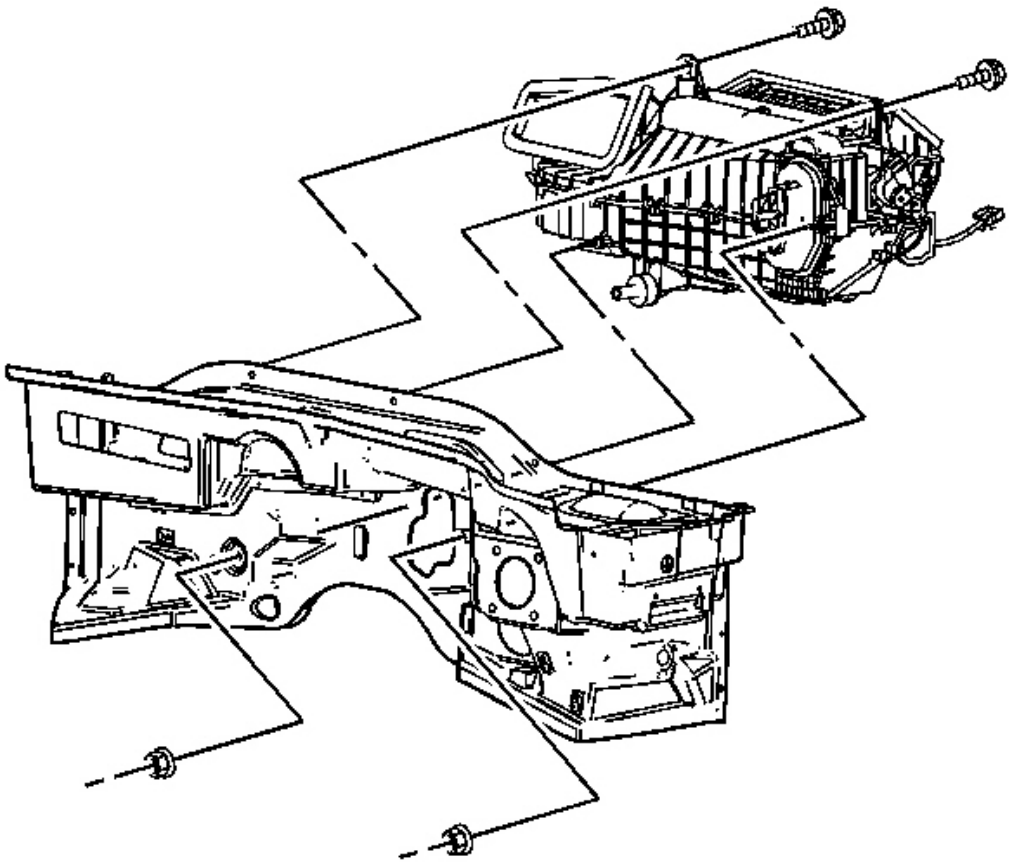

Fig. 172: HVAC Module, I/P Cross Vehicle Beam & Components
Courtesy of GENERAL MOTORS CORP.

11. Install the bolts retaining the HVAC module to the upper I/P cross vehicle beam.

    Tighten: Tighten the bolts to 5 N.m (44 lb in).

    IMPORTANT: To prevent possible water leaks or wind/road noise from entering the vehicle passenger compartment, do not reuse the old HVAC module retaining and sealing nuts.

12. Install new HVAC module retaining and sealing nuts.

    Tighten: Tighten the nuts to 10 N.m (89 lb in).

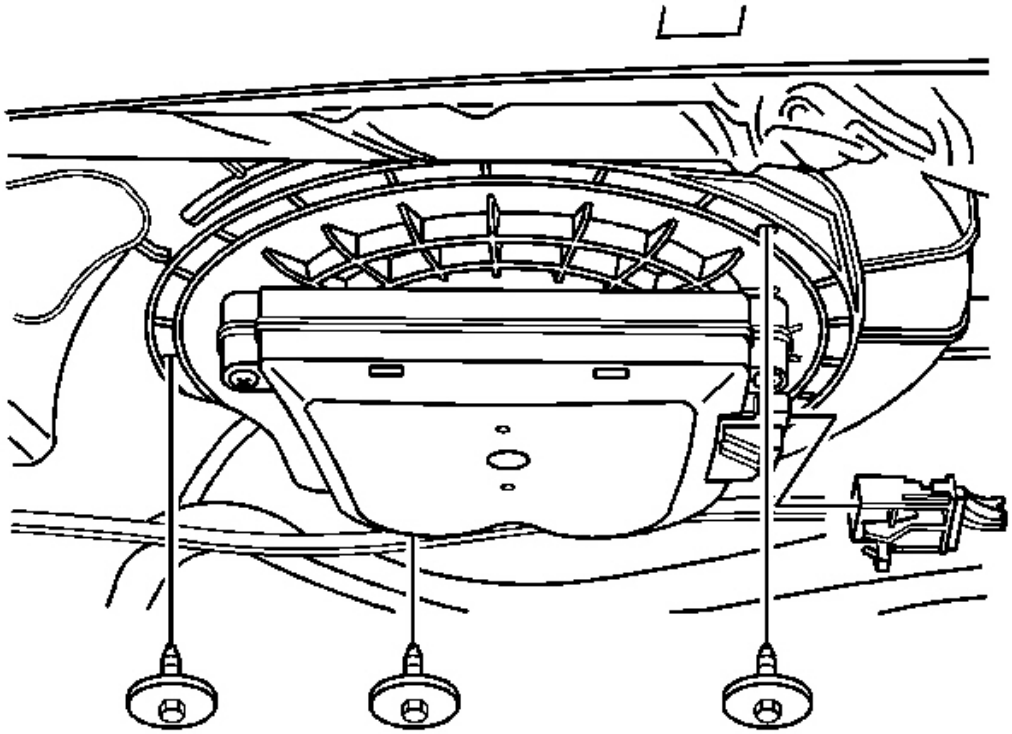

Fig. 173: Blower Motor & Retaining Screws At HVAC Module
Courtesy of GENERAL MOTORS CORP.

13. Install the blower motor to the HVAC module.
14. Install the blower motor retaining screws.

    Tighten: Tighten the screws to 1.6 N.m (14 lb in).

15. Connect the blower motor electrical connector.

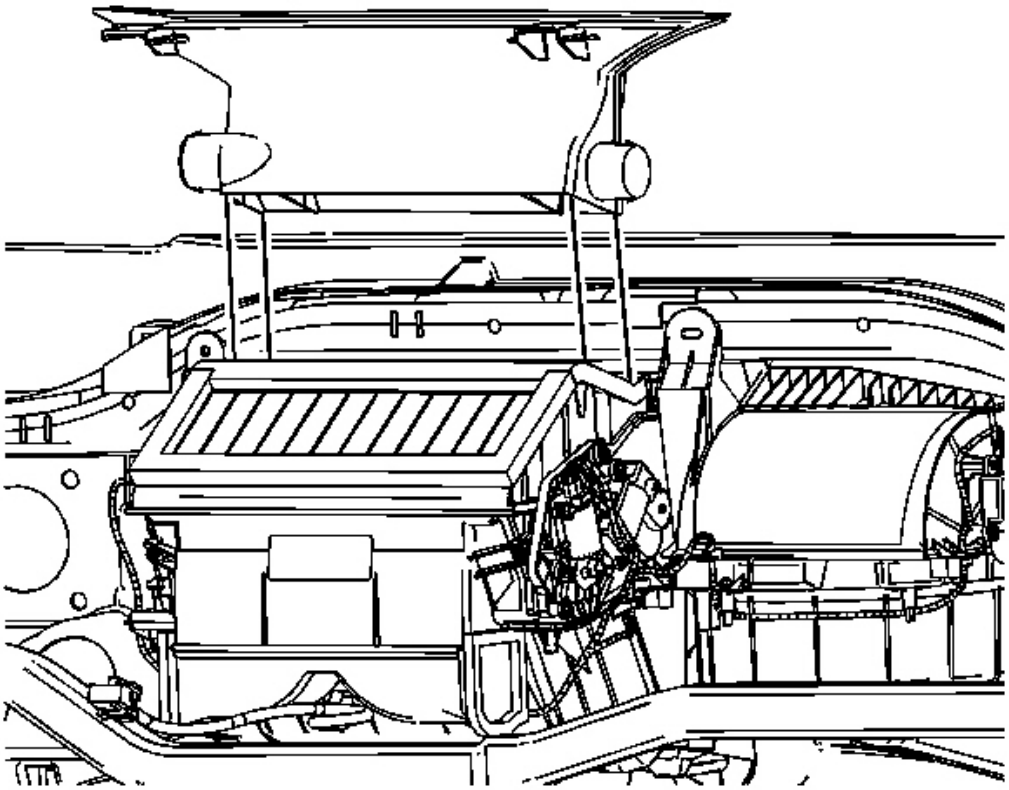

Fig. 174: Defroster Duct
Courtesy of GENERAL MOTORS CORP.

16. Install the defroster duct to the HVAC module.
17. Install the defroster duct retaining screws.

    Tighten: Tighten the screws to 10 N.m (89 lb in).

18. Install the right floor air outlet duct.

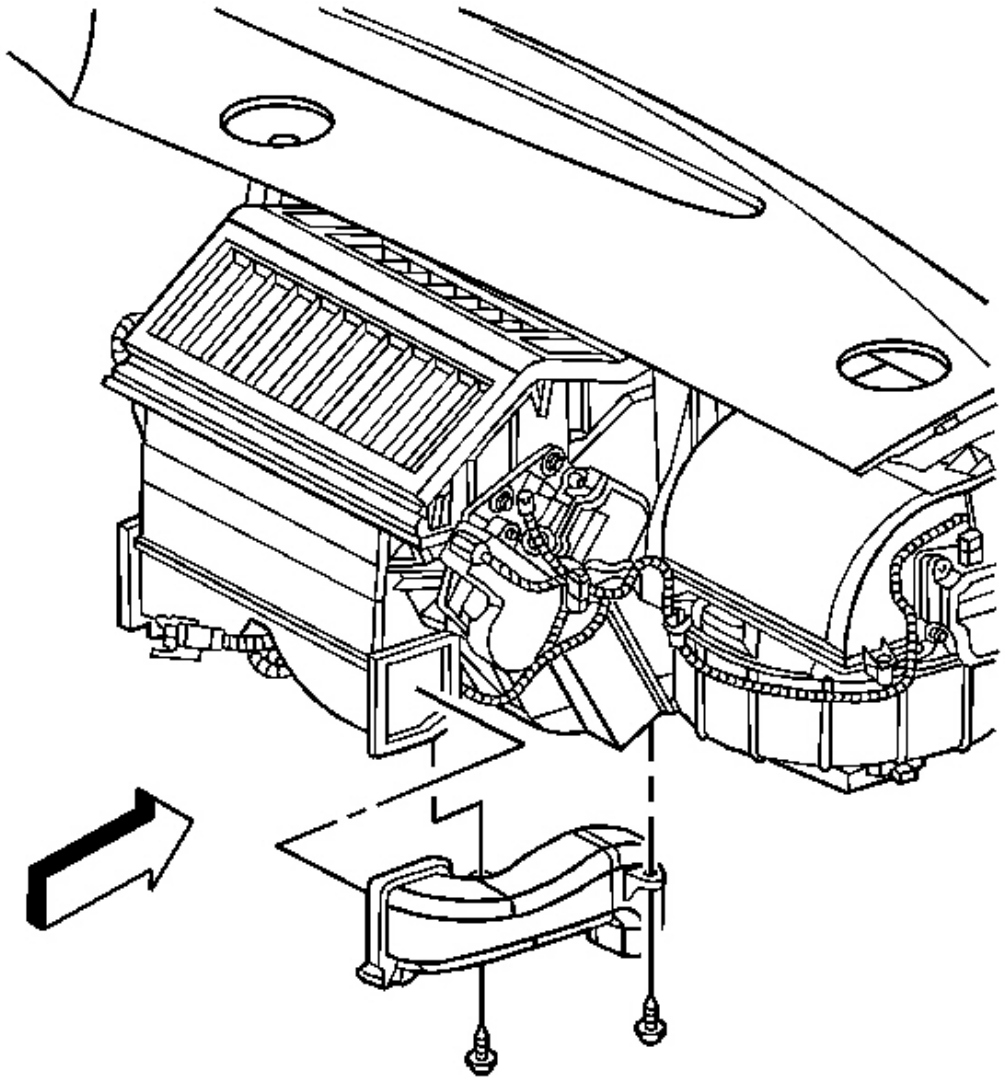

Fig. 175: Air Outlet Duct & Retaining Screws
Courtesy of GENERAL MOTORS CORP.

19. Install the floor air outlet duct retaining screws.

    Tighten: Tighten the screws to 1.6 N.m (14 lb in).

20. Install the knee bolster bracket. Refer to **Knee Bolster Bracket Replacement - Right** in

Instrument Panel, Gages and Console.

21. Install the lower outlet duct to the side window defogger.
22. Connect the lower outlet duct on the side window defogger to the defroster duct.

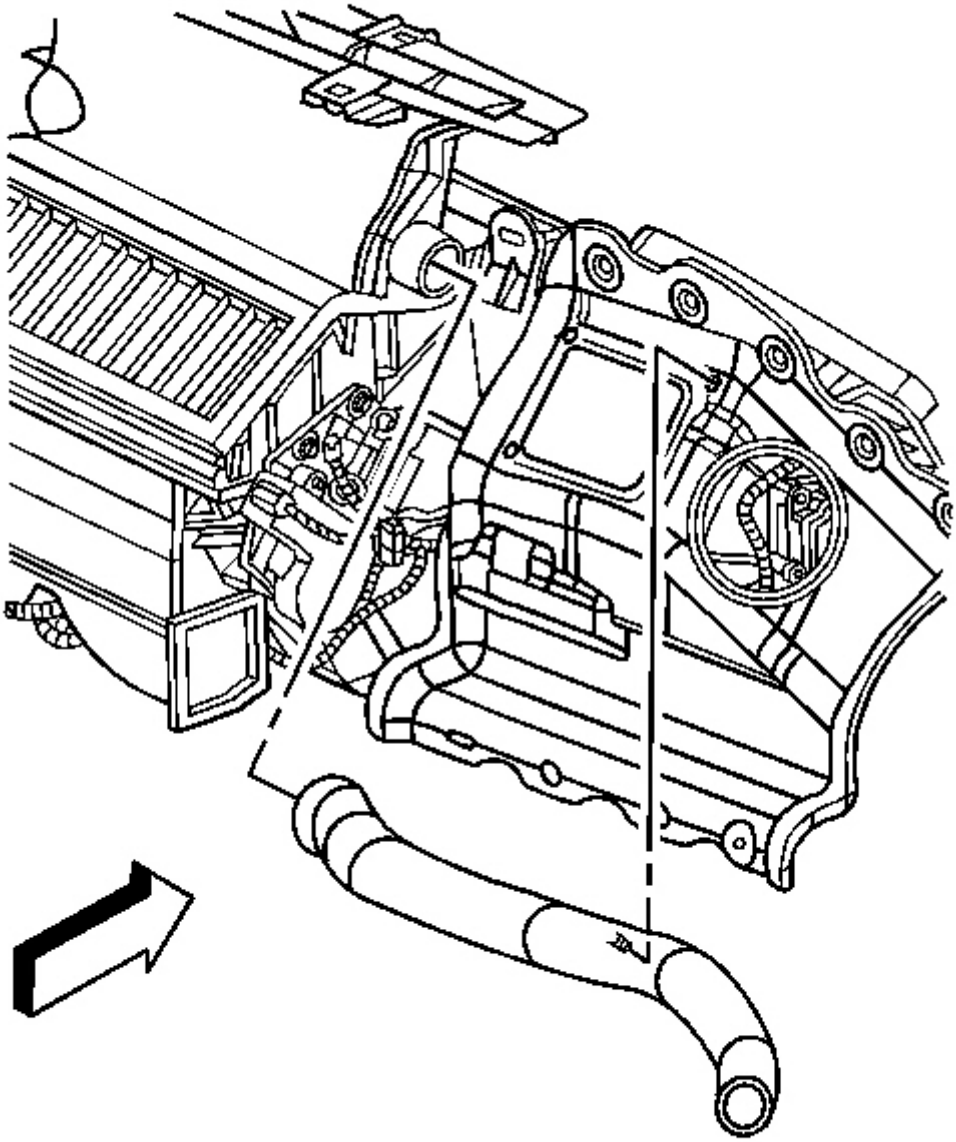

Fig. 176: Identifying Defogger Lower Outlet Duct
Courtesy of GENERAL MOTORS CORP.

23. Connect the defogger lower outlet duct to the knee bolster bracket.
24. Connect the defogger upper outlet duct to the defogger lower outlet duct.

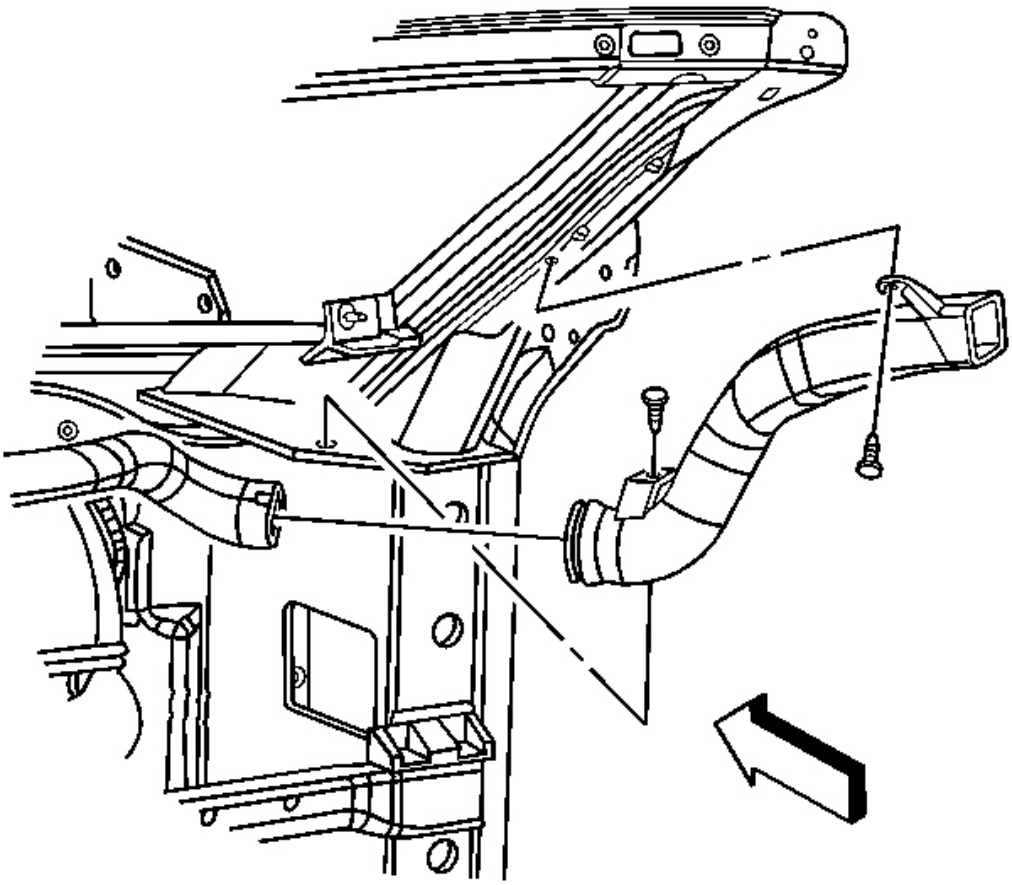

Fig. 177: Defogger Outlet Ducts & Retainers
Courtesy of GENERAL MOTORS CORP.

25. Install the retainers to the defogger upper outlet duct.
26. Install the left rear floor air outlet duct.

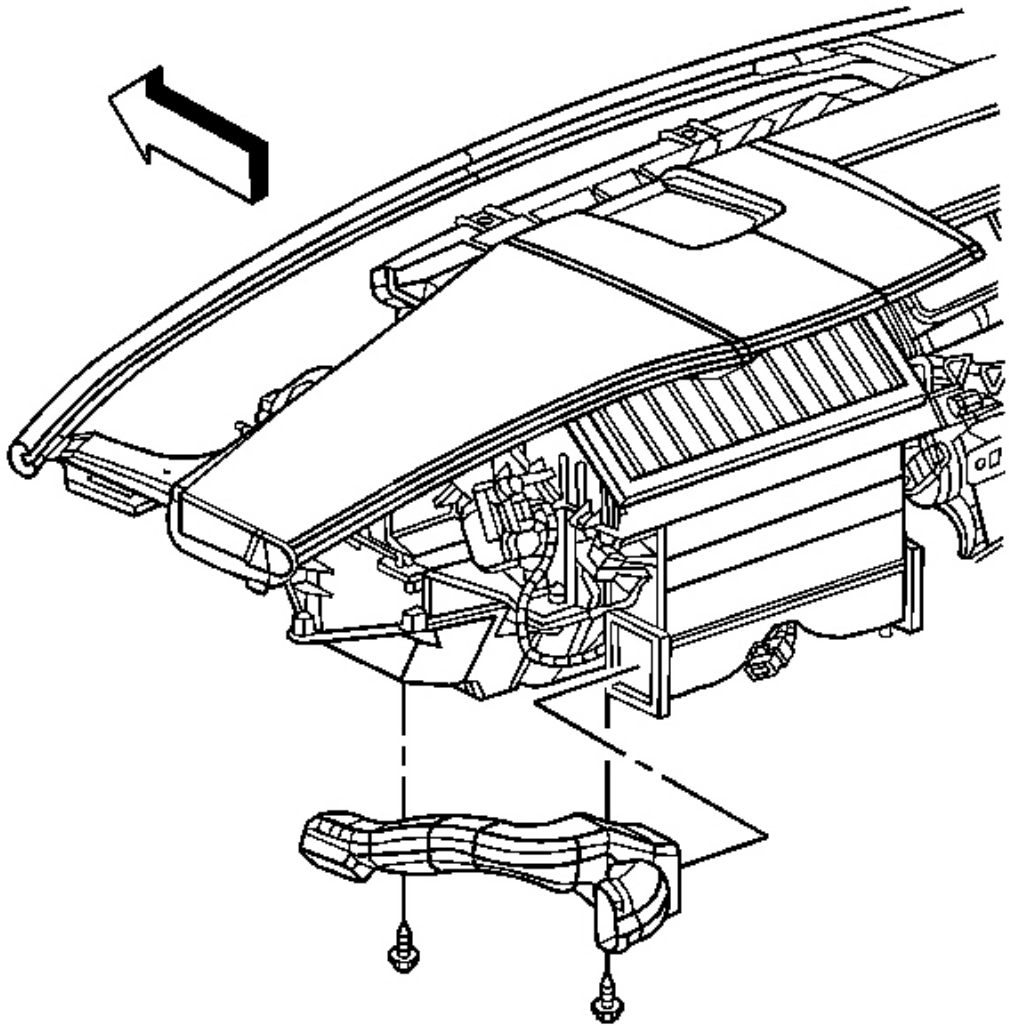

Fig. 178: Floor Air Outlet Duct & Retaining Screws
Courtesy of GENERAL MOTORS CORP.

27. Install the floor air outlet duct retaining screws.

    Tighten: Tighten the screws to 1.6 N.m (14 lb in).

28. Install the air outlet duct.
29. Connect the left floor air outlet duct to the left rear floor air outlet duct.

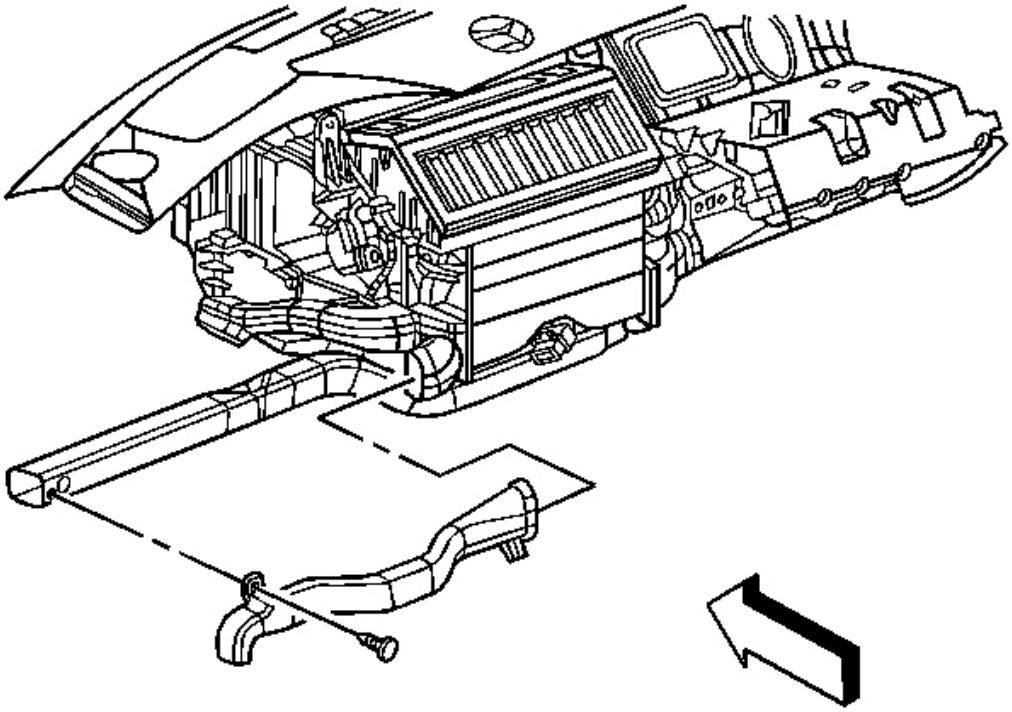

Fig. 179: Identifying Floor Air Outlet Duct & Retainer At I/P Beam
Courtesy of GENERAL MOTORS CORP.

30. Install the retainer securing the left floor air outlet duct to the lower I/P beam.
31. Connect the window defogger lower outlet duct to the defroster duct.

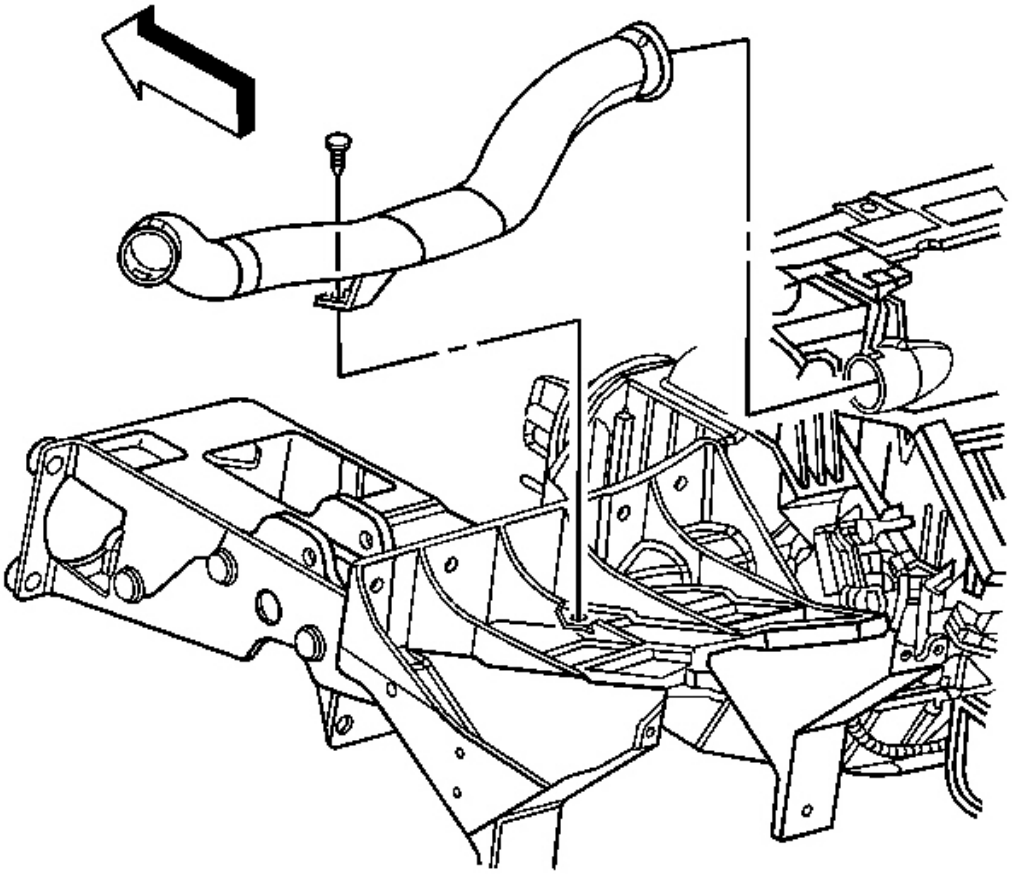

Fig. 180: Identifying Lower Defogger Outlet Duct & Retainer
Courtesy of GENERAL MOTORS CORP.

32. Install the defogger lower outlet duct retainer.
33. Install the screw that secures the HUD to the steering column bracket.

    Tighten: Tighten the screw to 3 N.m (27 lb in).

34. Install the HUD retaining nuts.

    Tighten: Tighten the nuts to 5 N.m (44 lb in).

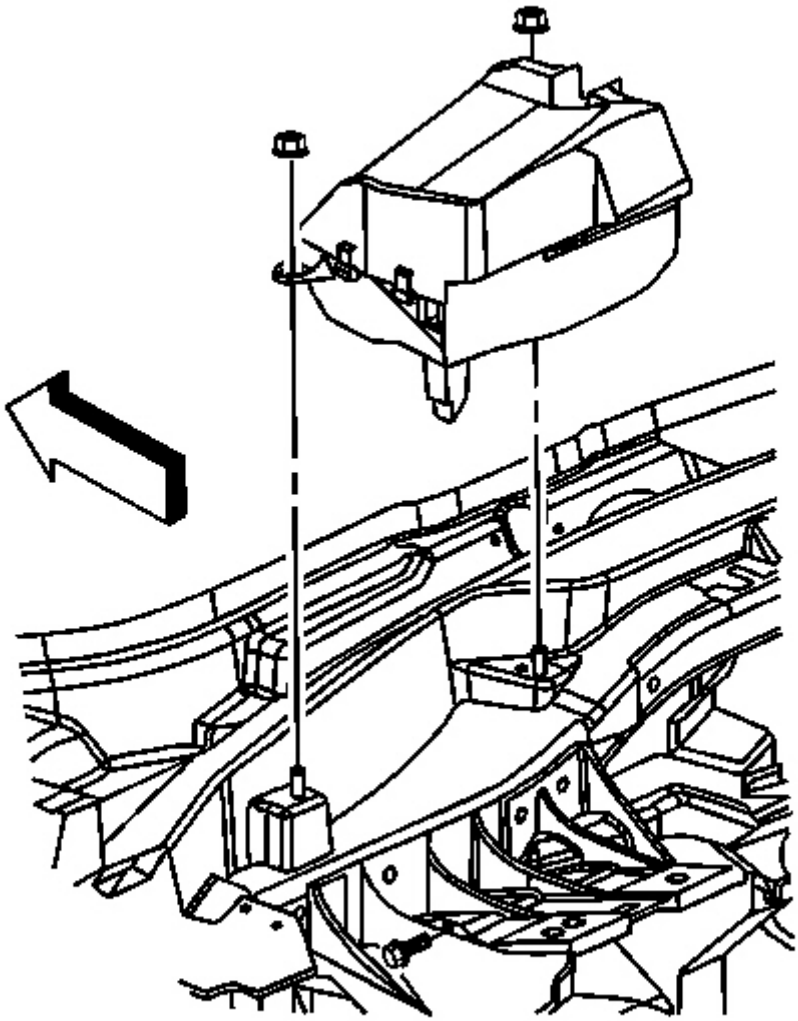

Fig. 181: View Of HUD
Courtesy of GENERAL MOTORS CORP.

35. Connect the HUD electrical connector.
36. Connect the defogger upper outlet duct.

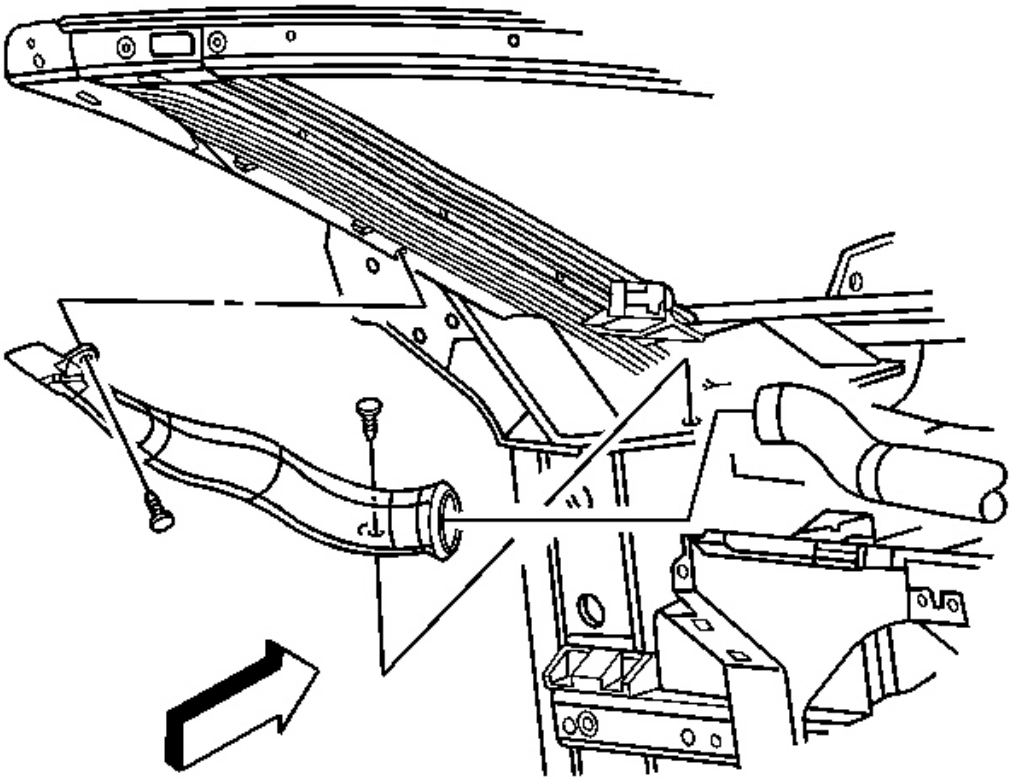

Fig. 182: Defogger Duct & Components
Courtesy of GENERAL MOTORS CORP.

37. Install the retainers to the upper defogger duct.
38. Install the I/P assembly. Refer to **Instrument Panel (I/P) Carrier Replacement** in Instrument Panel, Gages and Console.

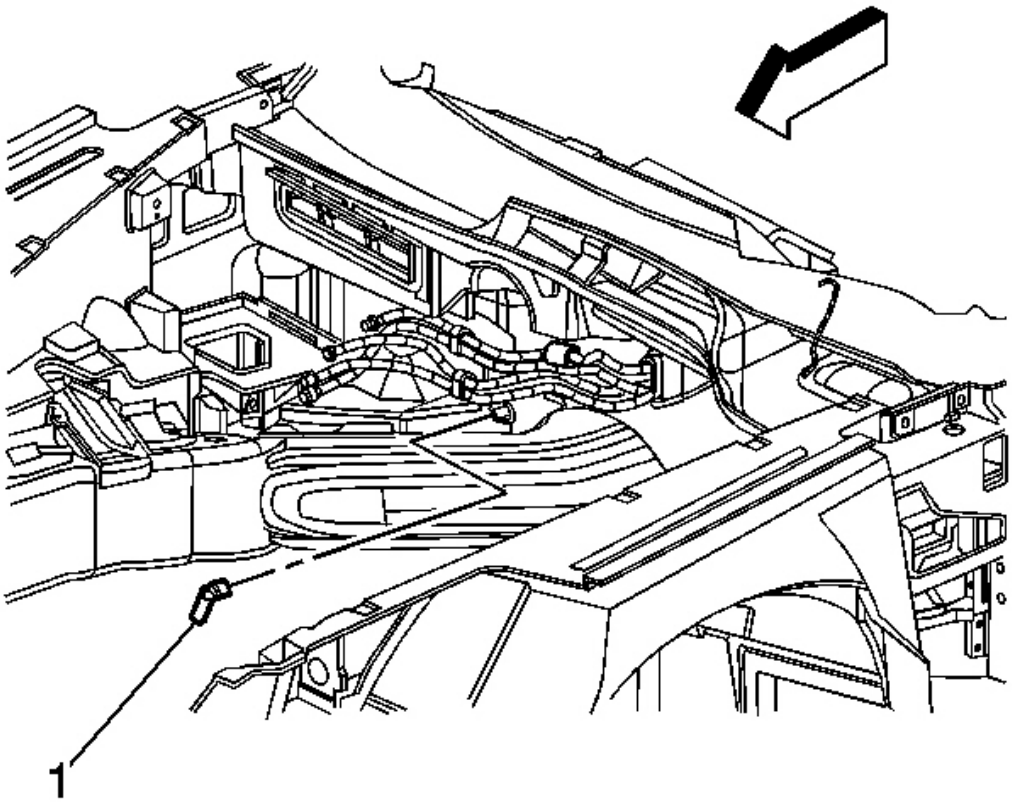

Fig. 183: Identifying Evaporator Drain Tube At HVAC Module
Courtesy of GENERAL MOTORS CORP.

IMPORTANT: Ensure that the evaporator drain tube is fully seated to the HVAC module.

39. Install the evaporator drain tube (1) to the HVAC module.
40. Connect engine wire harness electrical connector.
41. Install the engine wire harness bracket bolt.

    Tighten: Tighten the bolt to 10 N.m (89 lb in).

42. Install the heater pipe assembly. Refer to **Heater Pipes Replacement**.
43. Fill the cooling system. Refer to **Draining and Filling Cooling System** in Engine Cooling.

44. Evacuate and recharge the A/C system. Refer to **Refrigerant Recovery and Recharging**.
45. Leak test the fittings of the component using **J 39400-A** .

BLOWER MOTOR REPLACEMENT

Removal Procedure

1. Remove the RH insulator panel. Refer to **Closeout/Insulator Panel Replacement - Right** in Instrument Panel, Gages and Console.

CAUTION: Unplug the blower motor before removal. Blower motor case contact with any ground may start the fan and cause personal injury.

IMPORTANT: Blower speed is controlled by an internal pulse width module that is internal to the blower motor assembly and is not serviced separately.

2. Disconnect the blower motor electrical connector.

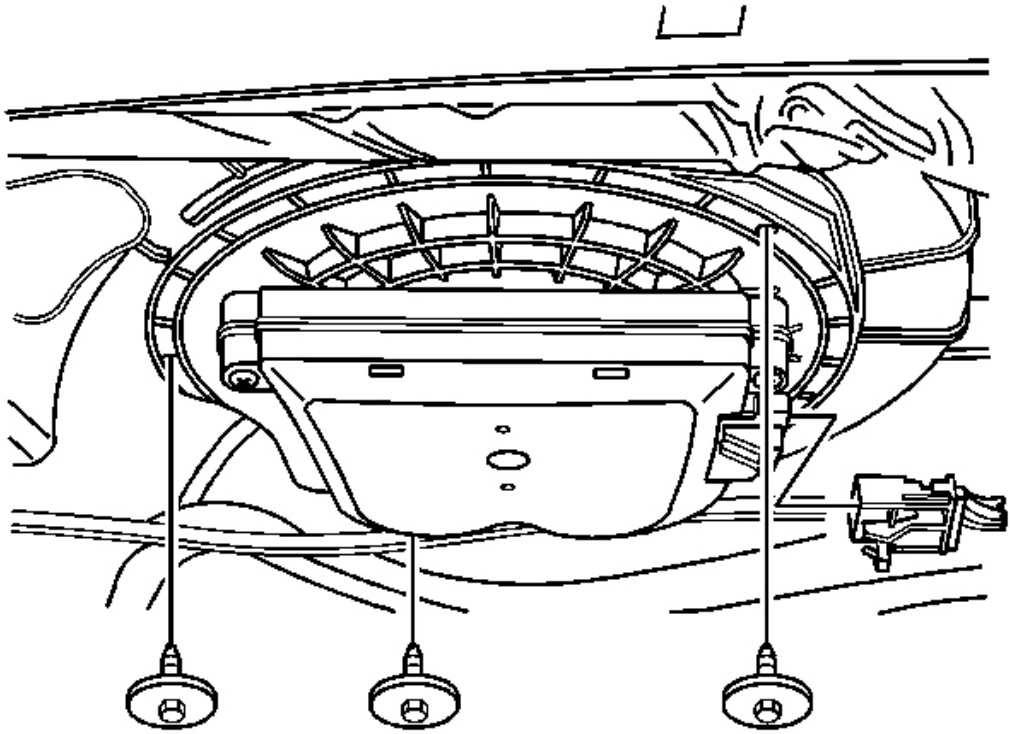

Fig. 184: Blower Motor & Retaining Screws At HVAC Module
Courtesy of GENERAL MOTORS CORP.

3. Remove the blower motor retaining screws.
4. Remove the blower motor from the HVAC module.

Installation Procedure

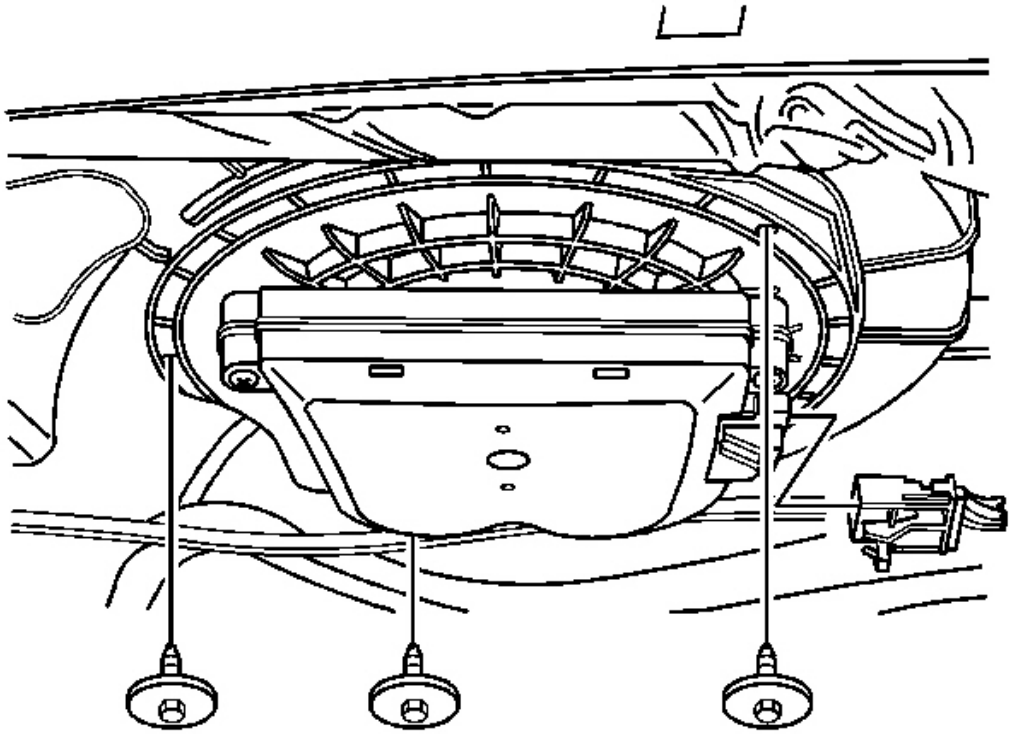

Fig. 185: Blower Motor & Retaining Screws At HVAC Module
Courtesy of GENERAL MOTORS CORP.

1. Install the blower motor to the HVAC module.

NOTE: Refer to Fastener Notice in Cautions and Notices.

2. Install the blower motor retaining screws.

   Tighten: Tighten the screws to 1.6 N.m (14 lb in).

3. Connect the blower motor electrical connector.
4. Install the RH insulator panel. Refer to **Closeout/Insulator Panel Replacement - Right** in Instrument Panel, Gages and Console.

DEFROSTER DUCT REPLACEMENT - WINDSHIELD

Removal Procedure

1. Remove the I/P assembly. Refer to **Instrument Panel (I/P) Carrier Replacement** in Instrument Panel, Gages and Console.

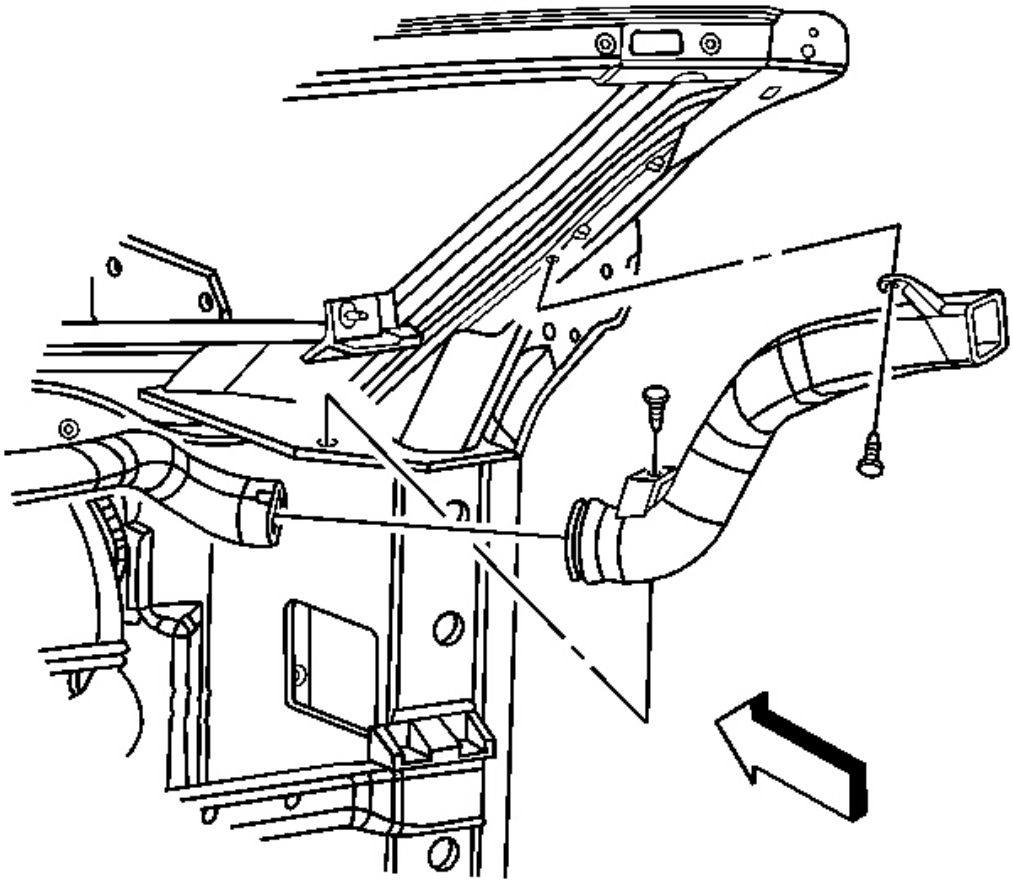

Fig. 186: Defogger Outlet Ducts & Retainers
Courtesy of GENERAL MOTORS CORP.

2. Remove the retainers from the RH defogger upper outlet duct.
3. Disconnect and remove the RH defogger upper outlet duct from the RH defogger lower outlet duct.

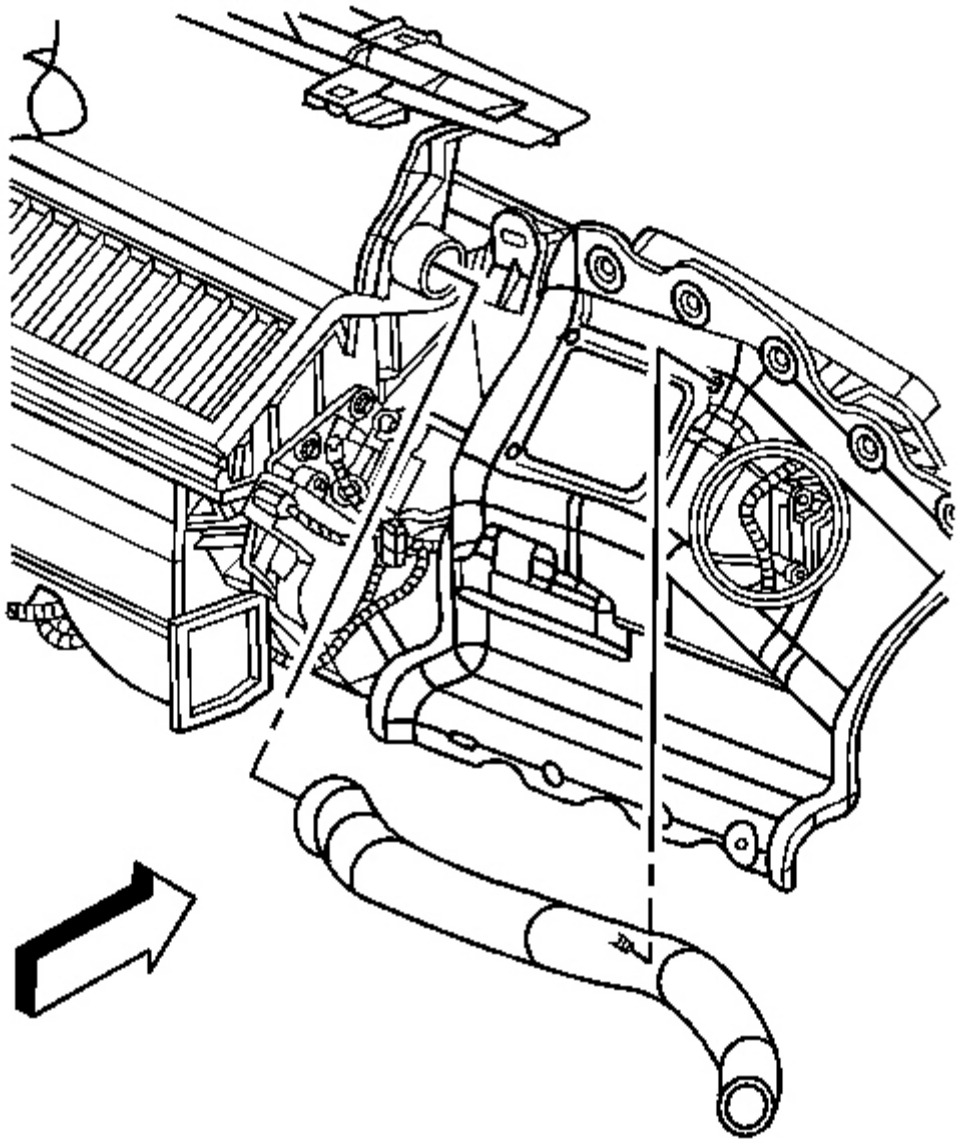

Fig. 187: Identifying Defogger Lower Outlet Duct
Courtesy of GENERAL MOTORS CORP.

4. Disconnect the RH defogger lower outlet duct from the SIR bracket.
5. Disconnect the RH defogger lower outlet duct from the defroster duct.
6. Remove the RH defogger lower outlet duct.

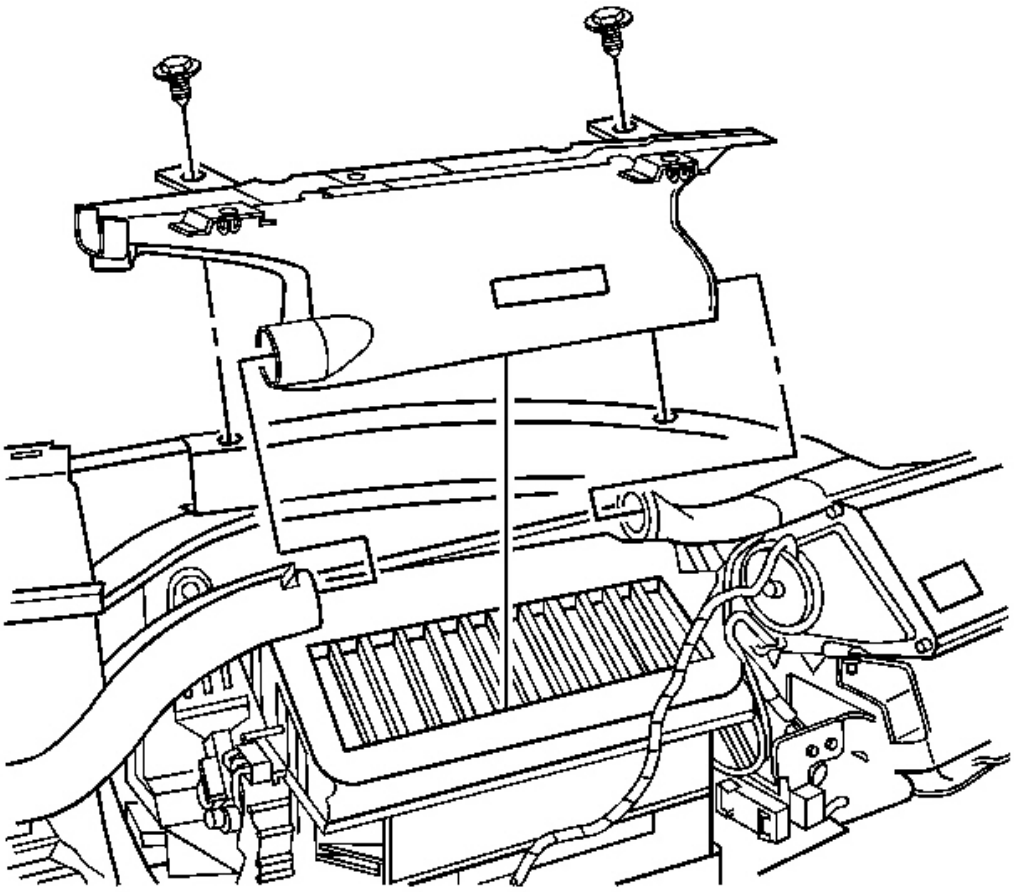

Fig. 188: Windshield Defroster Duct & Retaining Screws
Courtesy of GENERAL MOTORS CORP.

7. Remove the windshield defroster duct retaining screws.
8. Disconnect the defroster duct from the LH defogger lower outlet duct.
9. Remove the defroster duct.

Installation Procedure

IMPORTANT: If installing a new defroster duct, remove the protective plastic film from the defroster duct before installing.

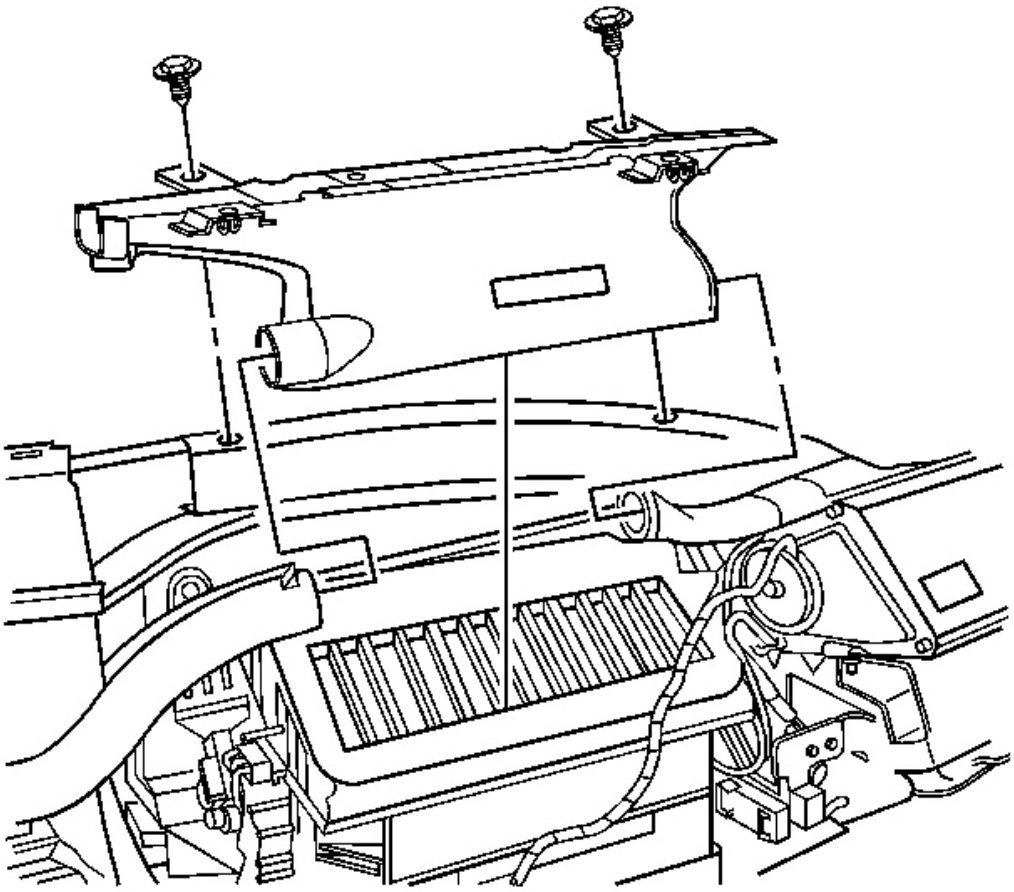

Fig. 189: Windshield Defroster Duct & Retaining Screws
Courtesy of GENERAL MOTORS CORP.

1. Install the defroster duct.
2. Connect the defroster duct to the LH defogger lower outlet duct.

NOTE: Refer to Fastener Notice in Cautions and Notices.

3. Install the retaining screws to the windshield defroster duct.

   Tighten: Tighten the screws to 10 N.m (89 lb in).

4. Install the RH defogger lower outlet duct.

5. Connect the RH defogger lower outlet duct to the defroster duct.

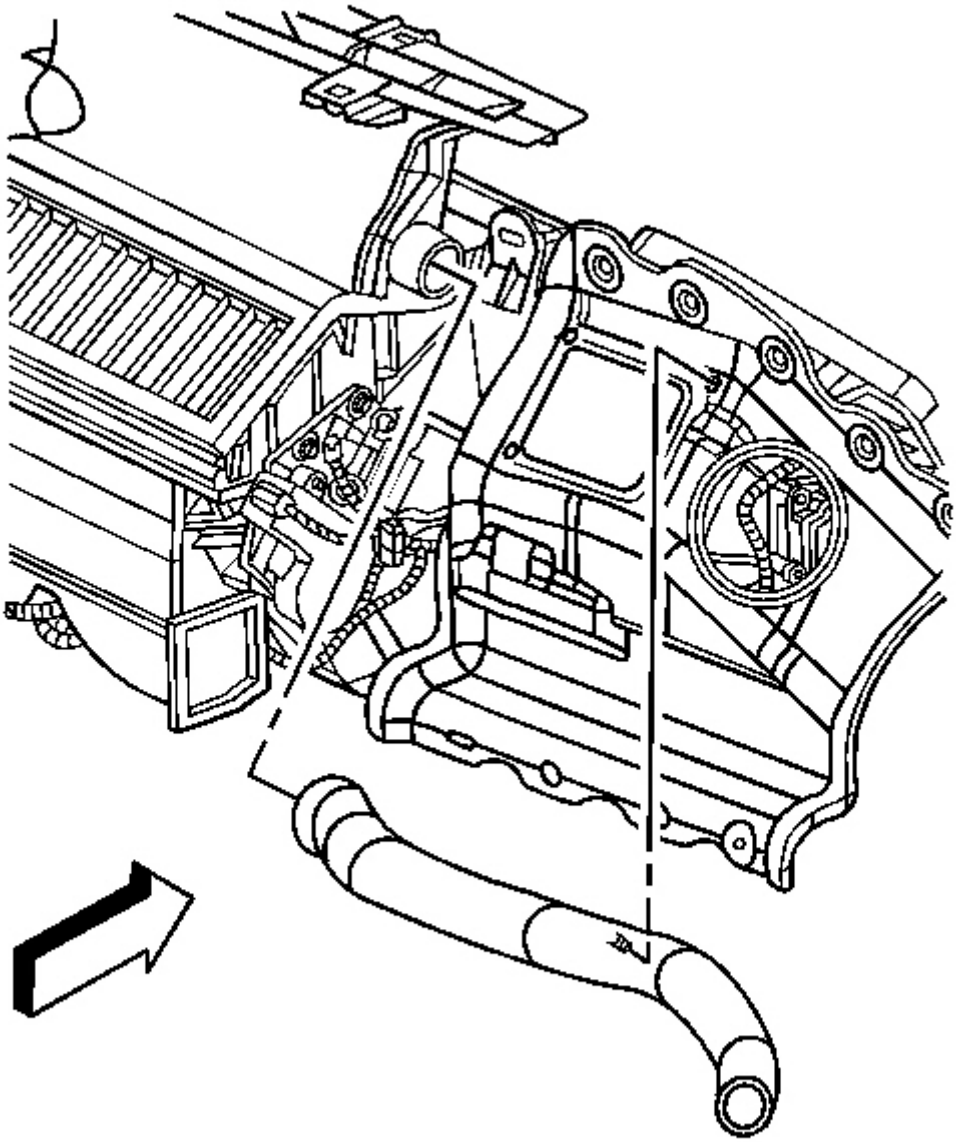

Fig. 190: Identifying Defogger Lower Outlet Duct
Courtesy of GENERAL MOTORS CORP.

6. Connect the RH defogger lower outlet duct to the SIR bracket.

7. Connect the RH defogger upper outlet duct to the RH defogger lower outlet duct.

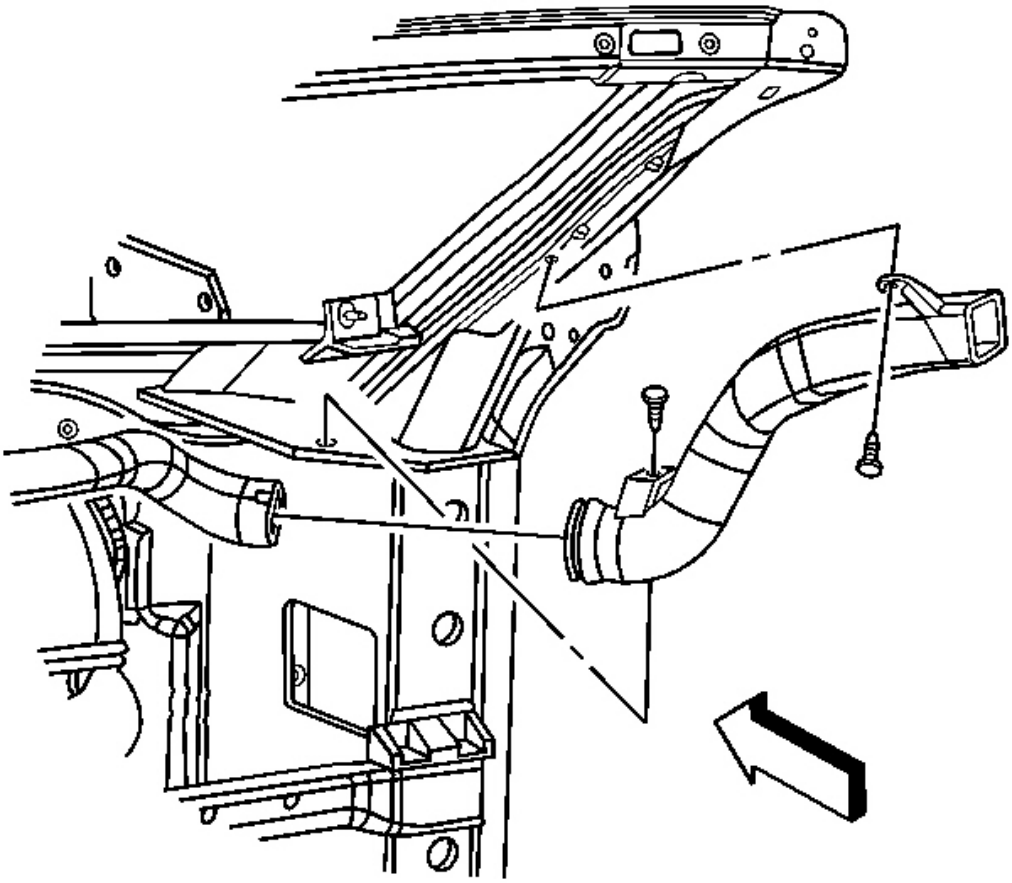

Fig. 191: Defogger Outlet Ducts & Retainers
Courtesy of GENERAL MOTORS CORP.

8. Install the retainers to the RH defogger upper outlet duct.
9. Install the I/P assembly. Refer to **Instrument Panel (I/P) Carrier Replacement** in Instrument Panel, Gages and Console.

AIR DISTRIBUTION DUCT REPLACEMENT

Removal Procedure

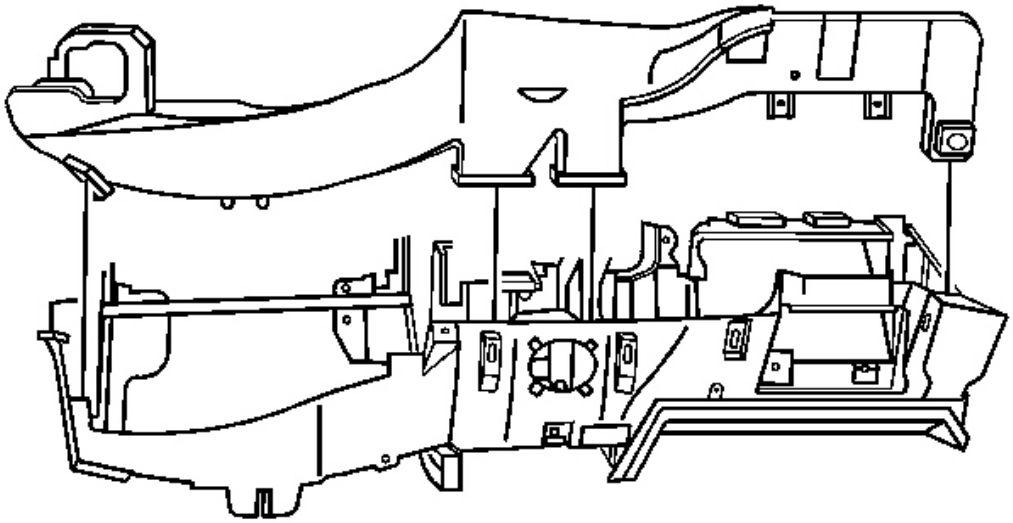

Fig. 192: Air Distribution Duct & Underside Of I/P Assembly
Courtesy of GENERAL MOTORS CORP.

1. Remove the I/P assembly. Refer to **Instrument Panel (I/P) Carrier Replacement** in Instrument Panel, Gages and Console.
2. Remove the screws retaining the air distribution duct to the underside of the I/P assembly.
3. Remove the air distribution duct.
4. Remove the DTM sensors from the air distribution duct.

Installation Procedure

1. Install the DTM sensors to the air distribution duct.

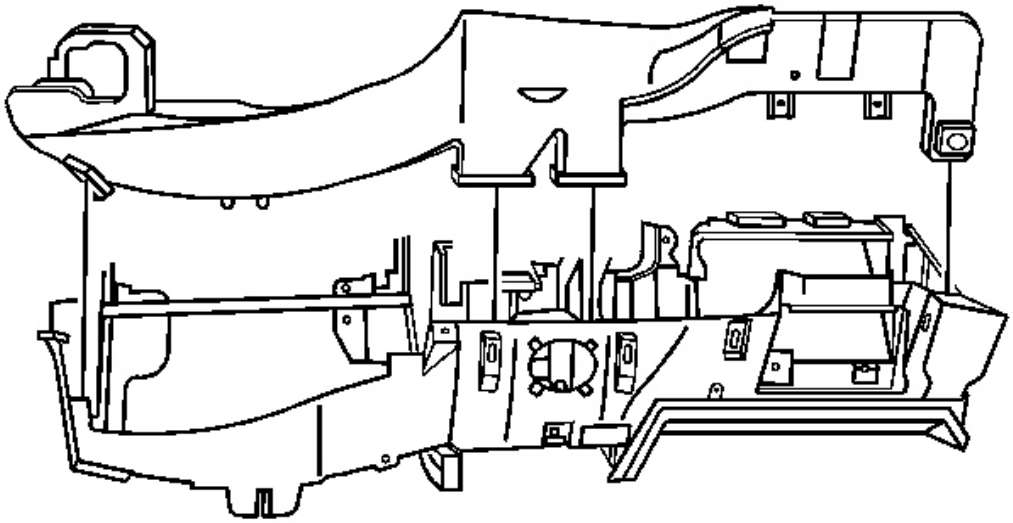

Fig. 193: Air Distribution Duct & Underside Of I/P Assembly
Courtesy of GENERAL MOTORS CORP.

2. Install the air distribution duct into position on the I/P assembly.
3. Install the retaining screws to the underside of the I/P assembly.

   Tighten: Tighten the screws to 1.6 N.m (14 lb in).

4. Install the I/P assembly. Refer to **Instrument Panel (I/P) Carrier Replacement** in Instrument Panel, Gages and Console.

DEFOGGER OUTLET DUCT REPLACEMENT - SIDE WINDOW, LH

Removal Procedure

1. Remove the I/P assembly. Refer to **Instrument Panel (I/P) Carrier Replacement** in Instrument Panel, Gages and Console.

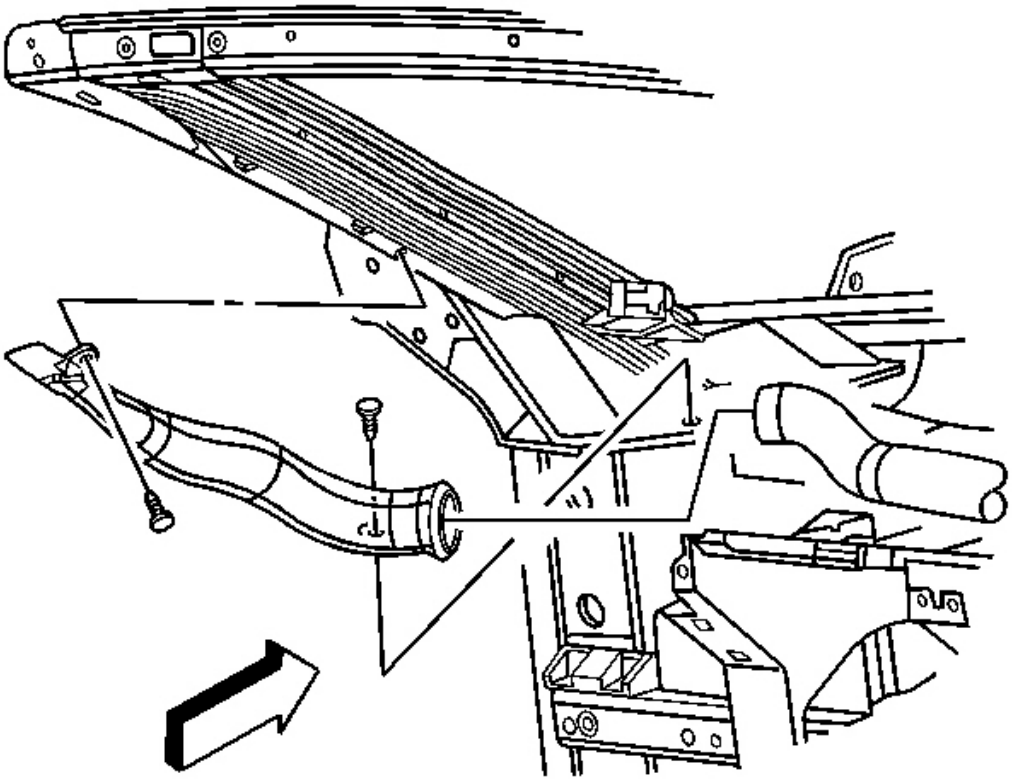

Fig. 194: Defogger Duct & Components
Courtesy of GENERAL MOTORS CORP.

2. Remove the retainers from the side window upper defogger duct.
3. Disconnect and remove the defogger upper outlet duct.

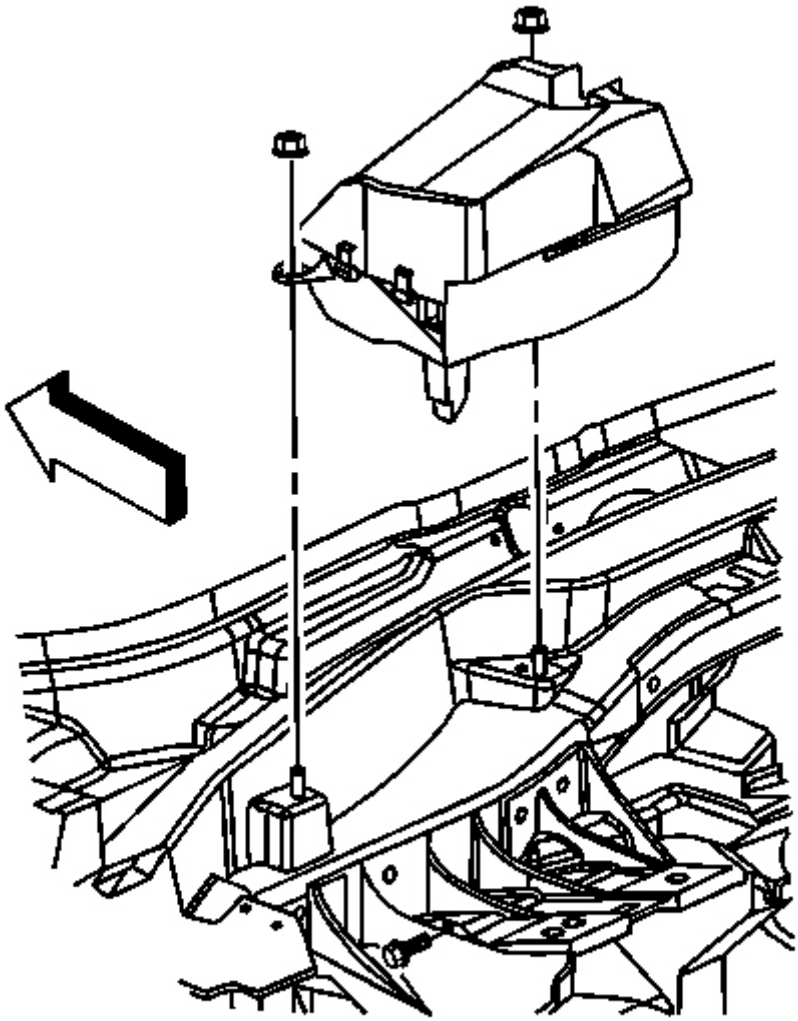

Fig. 195: View Of HUD
Courtesy of GENERAL MOTORS CORP.

4. Disconnect the HUD electrical connector.
5. Remove the HUD retaining nuts.
6. Remove the screw that secures the HUD to the steering column bracket.

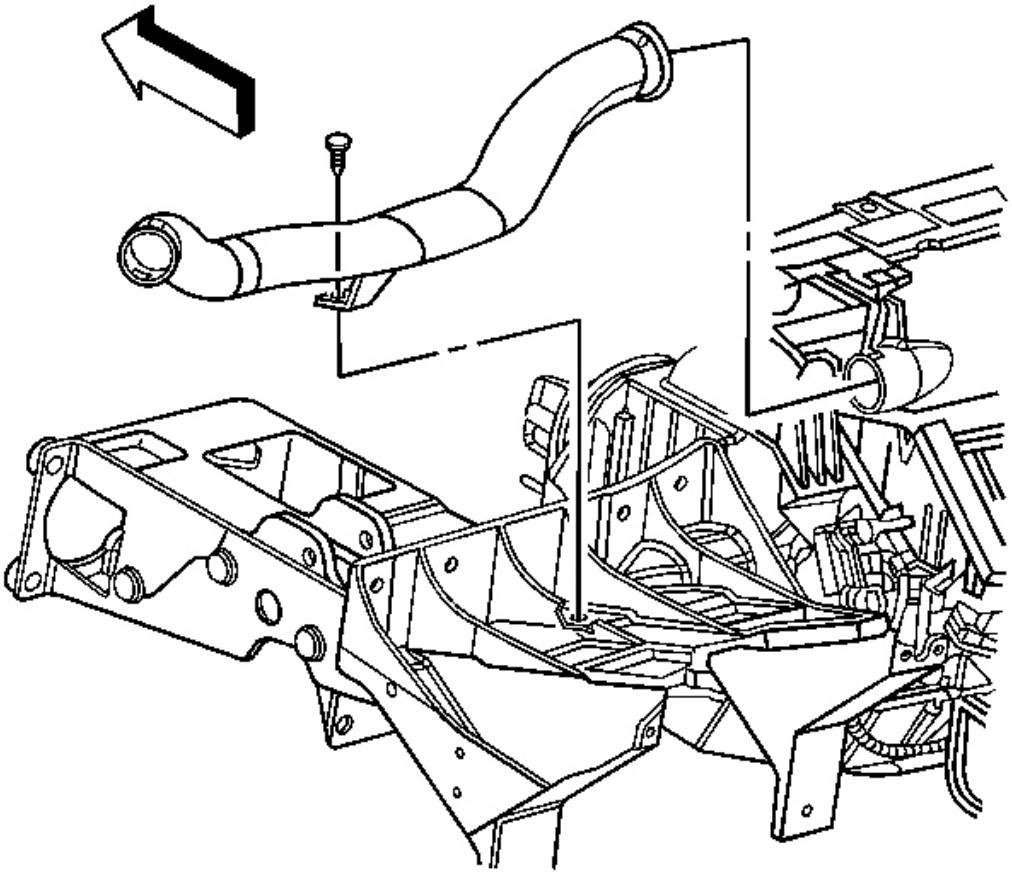

Fig. 196: Identifying Lower Defogger Outlet Duct & Retainer
Courtesy of GENERAL MOTORS CORP.

7. Remove the defogger lower outlet duct retainer.
8. Disconnect and remove the defogger lower outlet duct from the defroster duct.

Installation Procedure

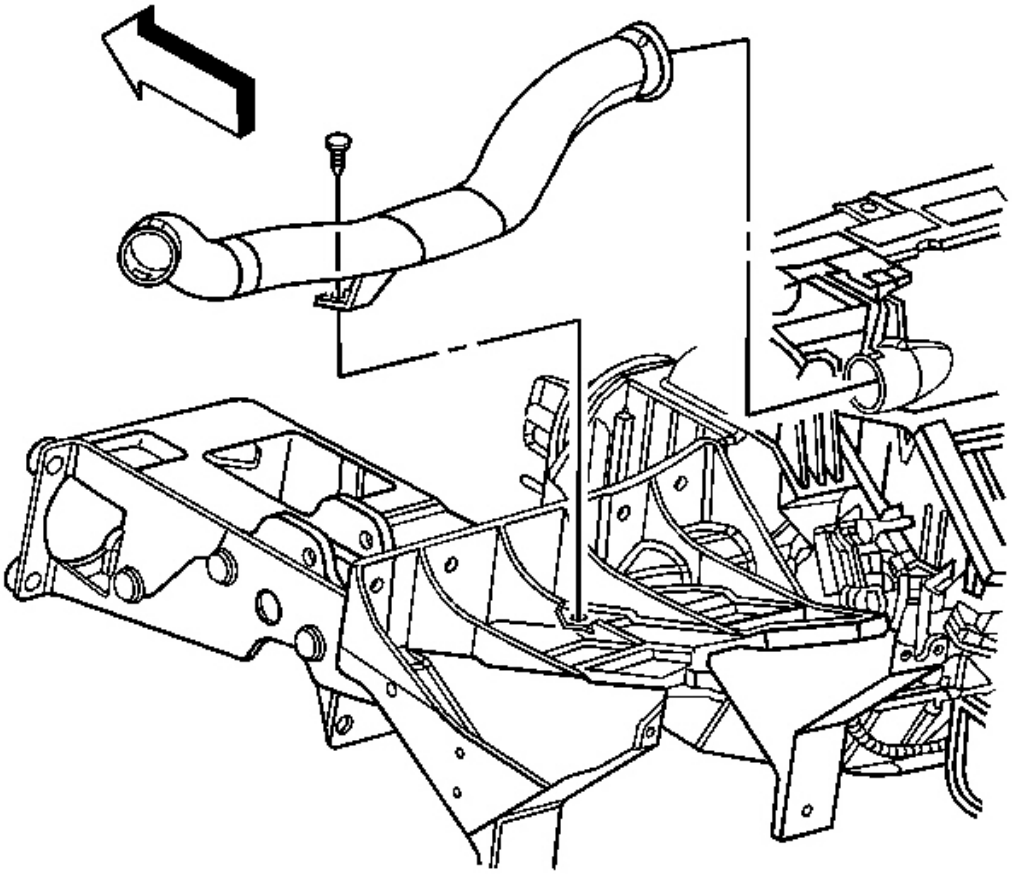

Fig. 197: Identifying Lower Defogger Outlet Duct & Retainer
Courtesy of GENERAL MOTORS CORP.

1. Install the defogger lower outlet duct.
2. Connect the defogger lower outlet duct to the defroster duct.
3. Install the retainer to the defogger lower outlet duct.

NOTE: Refer to Fastener Notice in Cautions and Notices.

4. Install the screw that secures the HUD to the steering column bracket.

   Tighten: Tighten the screw to 3 N.m (27 lb in).

5. Install the HUD retaining nuts.

   Tighten: Tighten the nuts to 5 N.m (44 lb in).

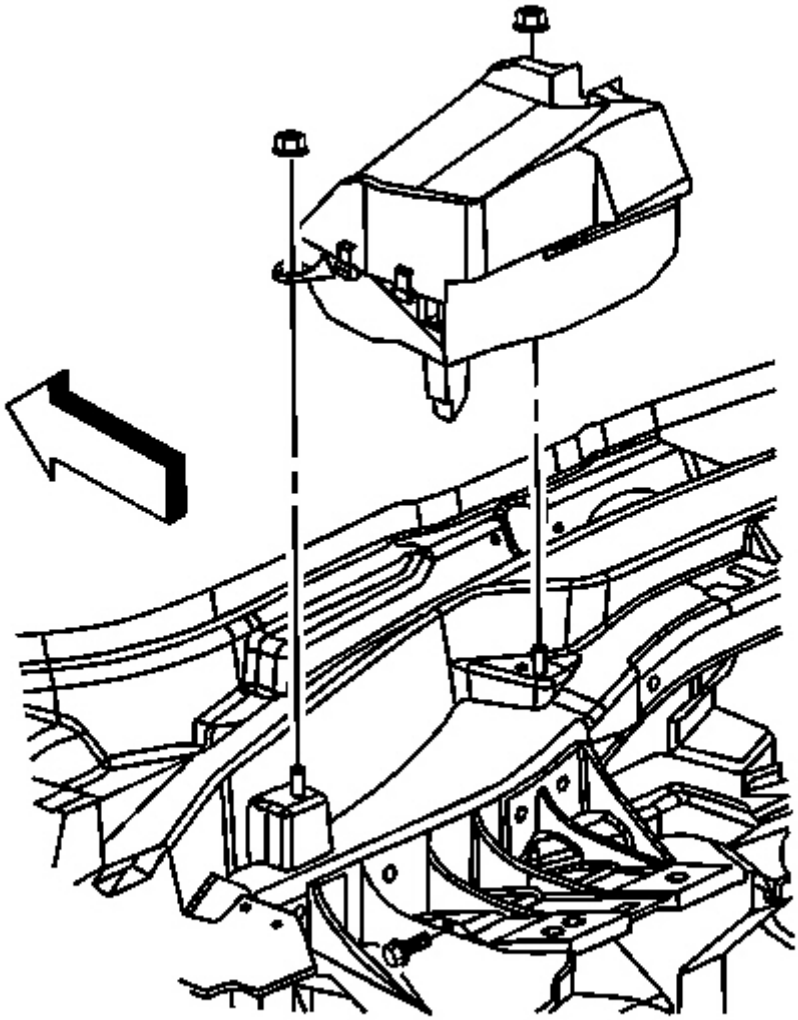

Fig. 198: View Of HUD
Courtesy of GENERAL MOTORS CORP.

6. Connect the HUD electrical connector.

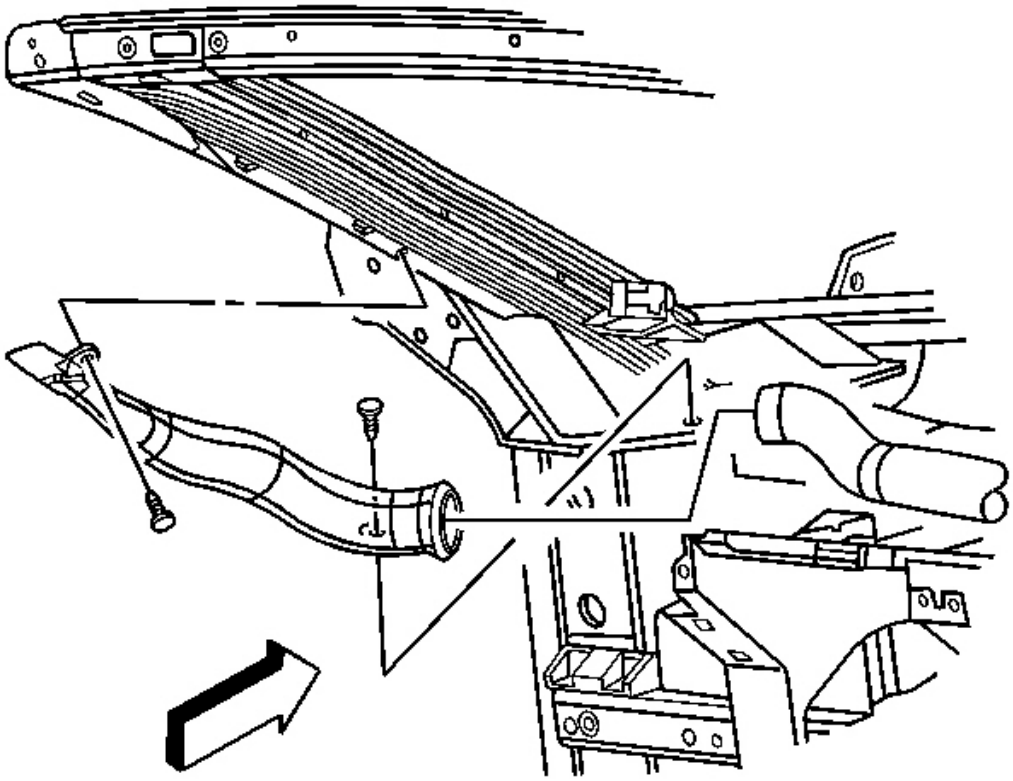

Fig. 199: Defogger Duct & Components
Courtesy of GENERAL MOTORS CORP.

7. Install and connect the defogger upper outlet duct to the defogger lower outlet duct.
8. Install the retainers to the upper defogger duct.
9. Install the I/P assembly. Refer to **Instrument Panel (I/P) Carrier Replacement** in Instrument Panel, Gages and Console.

DEFOGGER OUTLET DUCT REPLACEMENT - SIDE WINDOW, RH

Removal Procedure

1. Remove the I/P assembly. Refer to **Instrument Panel (I/P) Carrier Replacement** in Instrument Panel, Gages and Console.

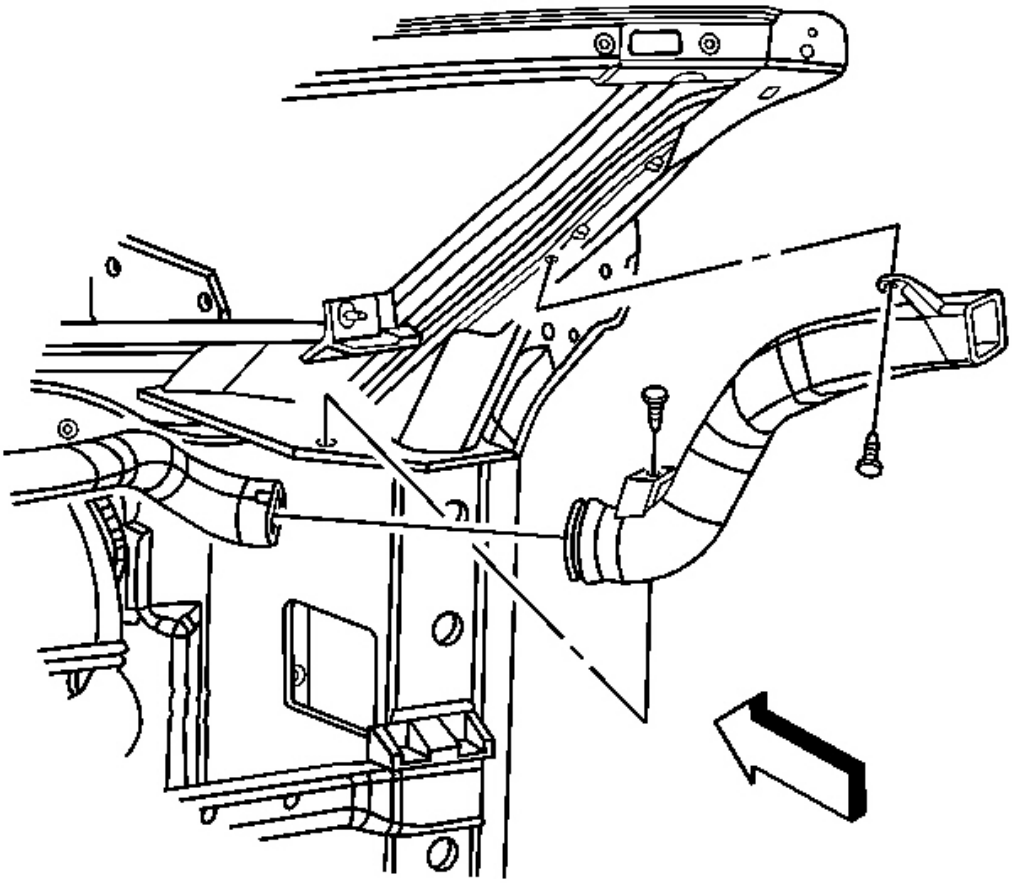

Fig. 200: Defogger Outlet Ducts & Retainers
Courtesy of GENERAL MOTORS CORP.

2. Remove the retainers from the defogger upper outlet duct.
3. Disconnect and remove the defogger upper outlet duct from the defogger lower outlet duct.

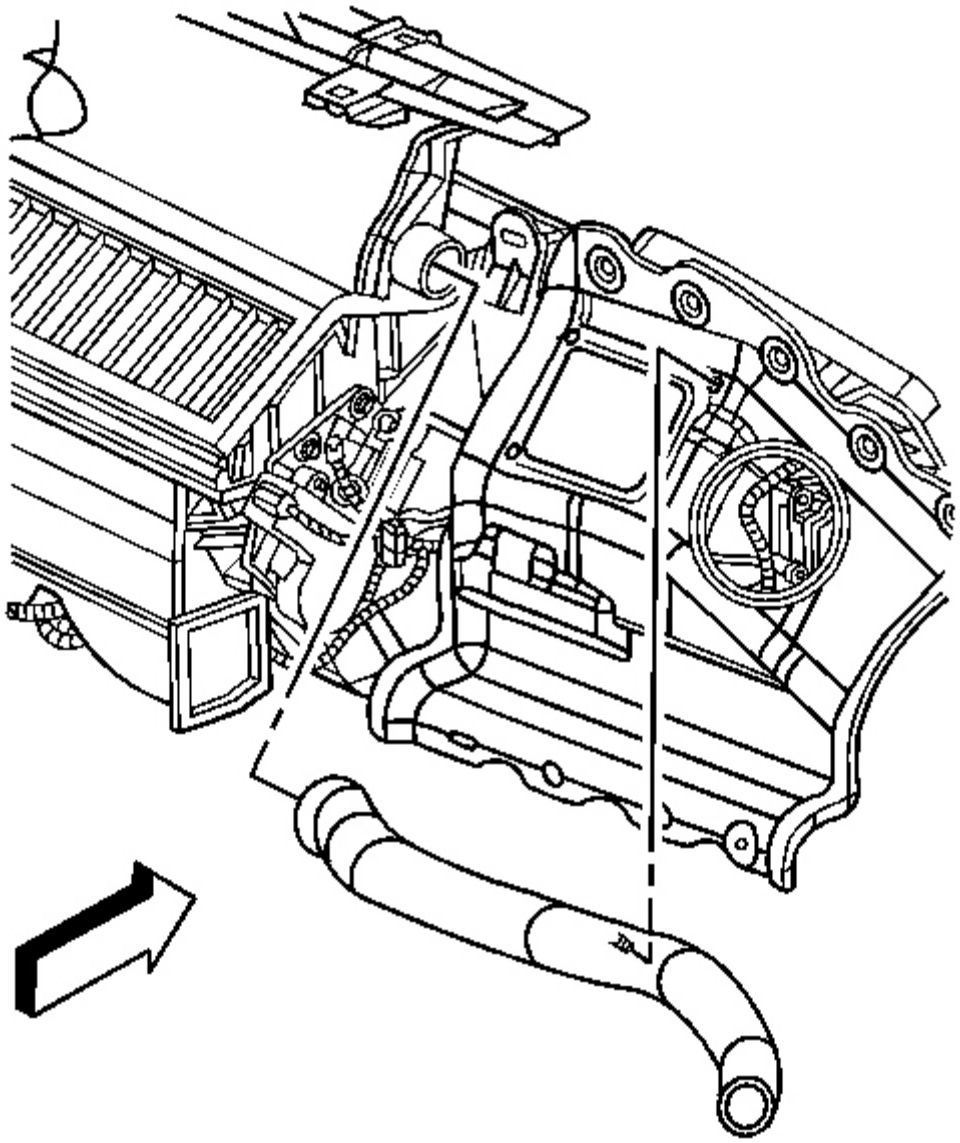

Fig. 201: Identifying Defogger Lower Outlet Duct
Courtesy of GENERAL MOTORS CORP.

4. Disconnect the defogger lower outlet duct from the SIR bracket.
5. Disconnect the defogger lower outlet duct from the defroster duct.
6. Remove the defogger lower outlet duct.

Installation Procedure

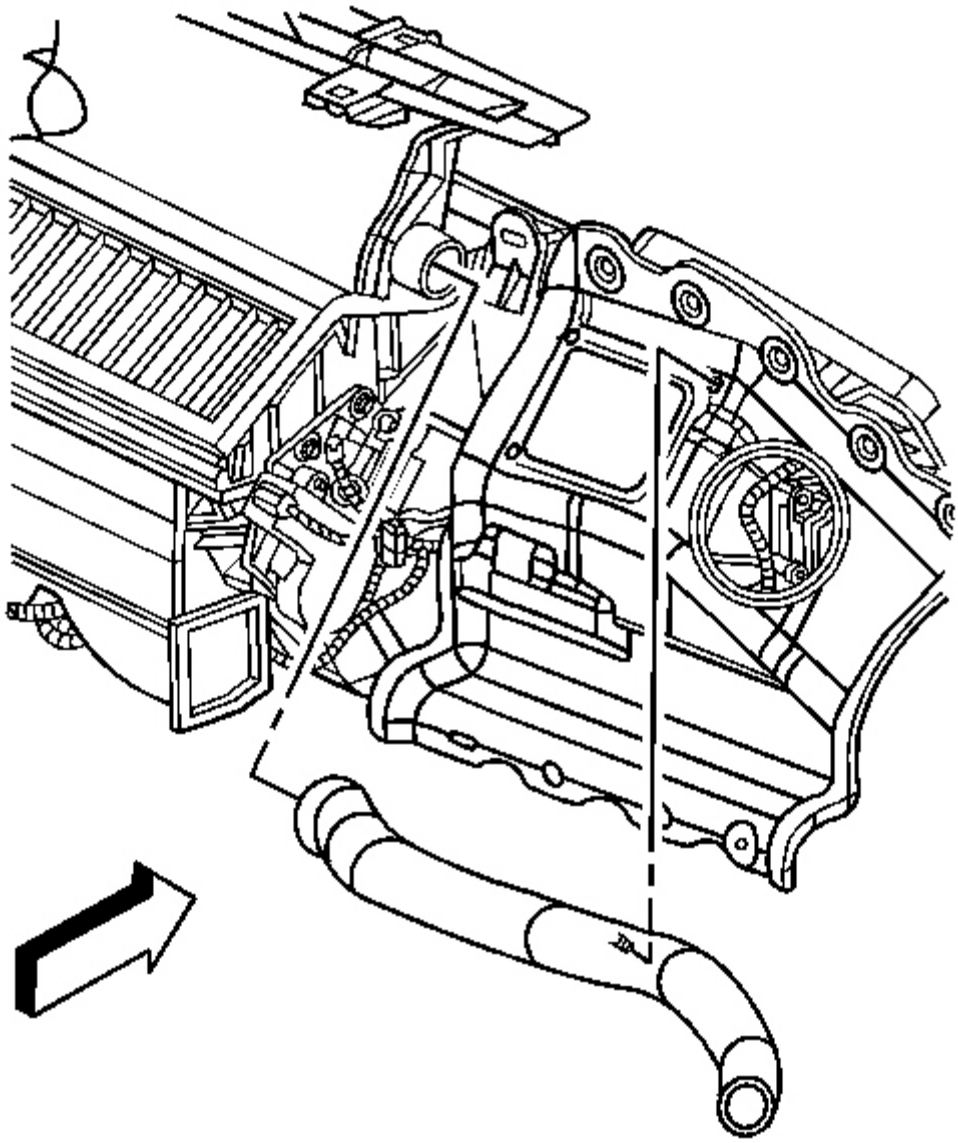

Fig. 202: Identifying Defogger Lower Outlet Duct
Courtesy of GENERAL MOTORS CORP.

1. Install the defogger lower outlet duct.

2. Connect the defogger lower outlet duct to the defroster duct.
3. Connect the defogger lower outlet duct to the SIR bracket.

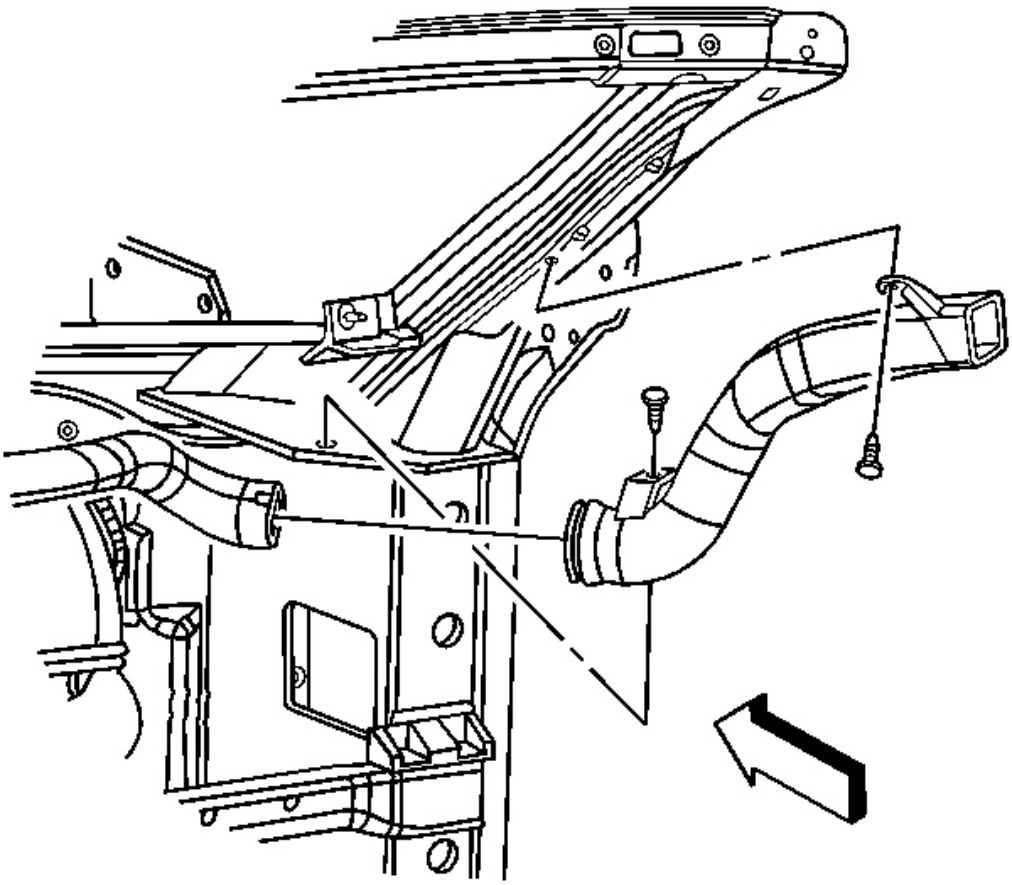

Fig. 203: Defogger Outlet Ducts & Retainers
Courtesy of GENERAL MOTORS CORP.

4. Connect the defogger upper outlet duct to the defogger lower outlet duct.
5. Install the retainers to the defogger upper outlet duct.
6. Install the I/P assembly. Refer to **Instrument Panel (I/P) Carrier Replacement** in Instrument Panel, Gages and Console.

AIR OUTLET DUCT REPLACEMENT - FLOOR, LH

Removal Procedure

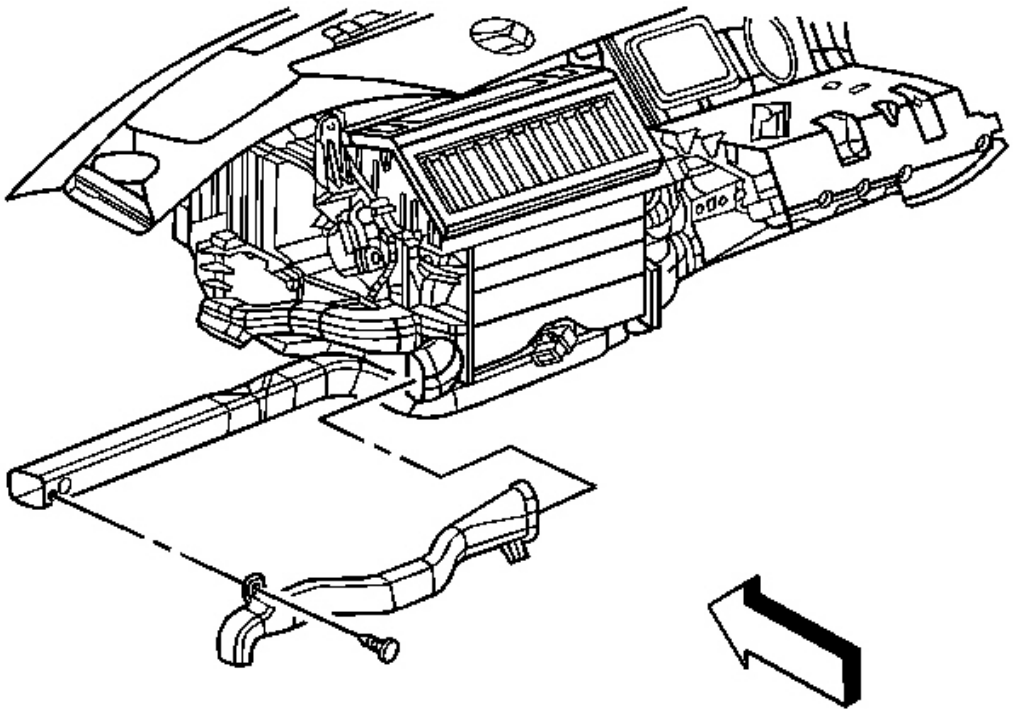

Fig. 204: Identifying Floor Air Outlet Duct & Retainer At I/P Beam
Courtesy of GENERAL MOTORS CORP.

1. Remove the LH lower insulator panel. Refer to **Closeout/Insulator Panel Replacement - Left** in Instrument Panel, Gages and Console.
2. Remove the retainer securing the LH floor air outlet duct to the lower I/P beam.
3. Disconnect the LH floor air outlet duct from the LH rear floor air outlet duct.
4. Remove the LH floor air outlet duct.

Installation Procedure

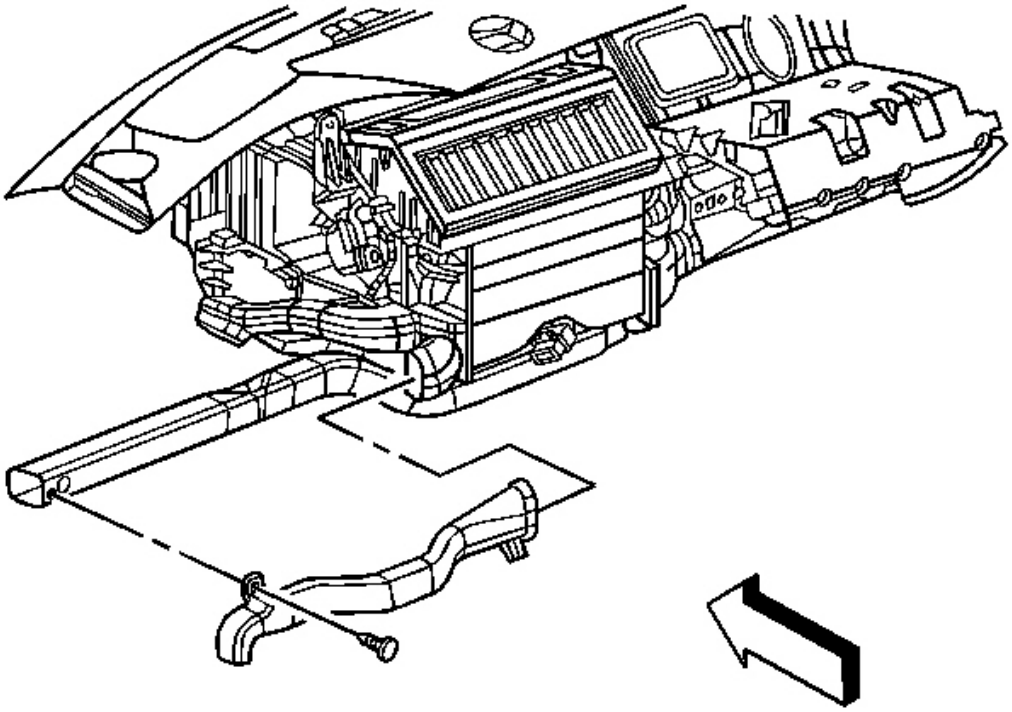

Fig. 205: Identifying Floor Air Outlet Duct & Retainer At I/P Beam
Courtesy of GENERAL MOTORS CORP.

1. Install the LH floor air outlet duct.
2. Connect the LH floor air outlet duct to the LH rear floor air outlet duct.
3. Install the retainer securing the LH floor air outlet duct to the lower I/P beam.
4. Remove the LH lower insulator panel. Refer to **Closeout/Insulator Panel Replacement - Left** in Instrument Panel, Gages and Console.

AIR OUTLET DUCT REPLACEMENT - FLOOR, RH

Removal Procedure

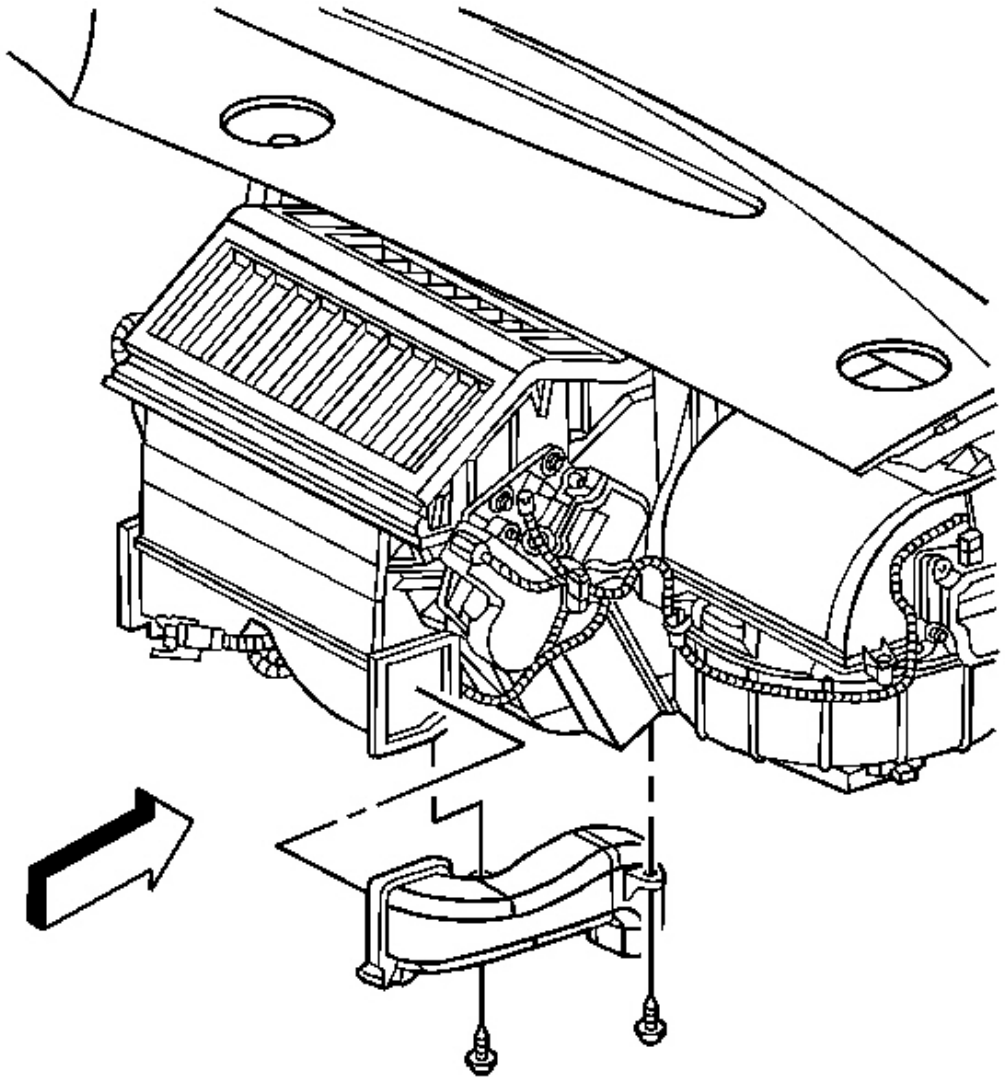

Fig. 206: Air Outlet Duct & Retaining Screws
Courtesy of GENERAL MOTORS CORP.

1. Remove the I/P assembly. Refer to **Instrument Panel (I/P) Carrier Replacement** in Instrument Panel, Gages and Console.
2. Remove the retaining screws from the right floor air outlet duct.
3. Disconnect the air outlet duct from the HVAC module.

4. Remove the air outlet duct.

Installation Procedure

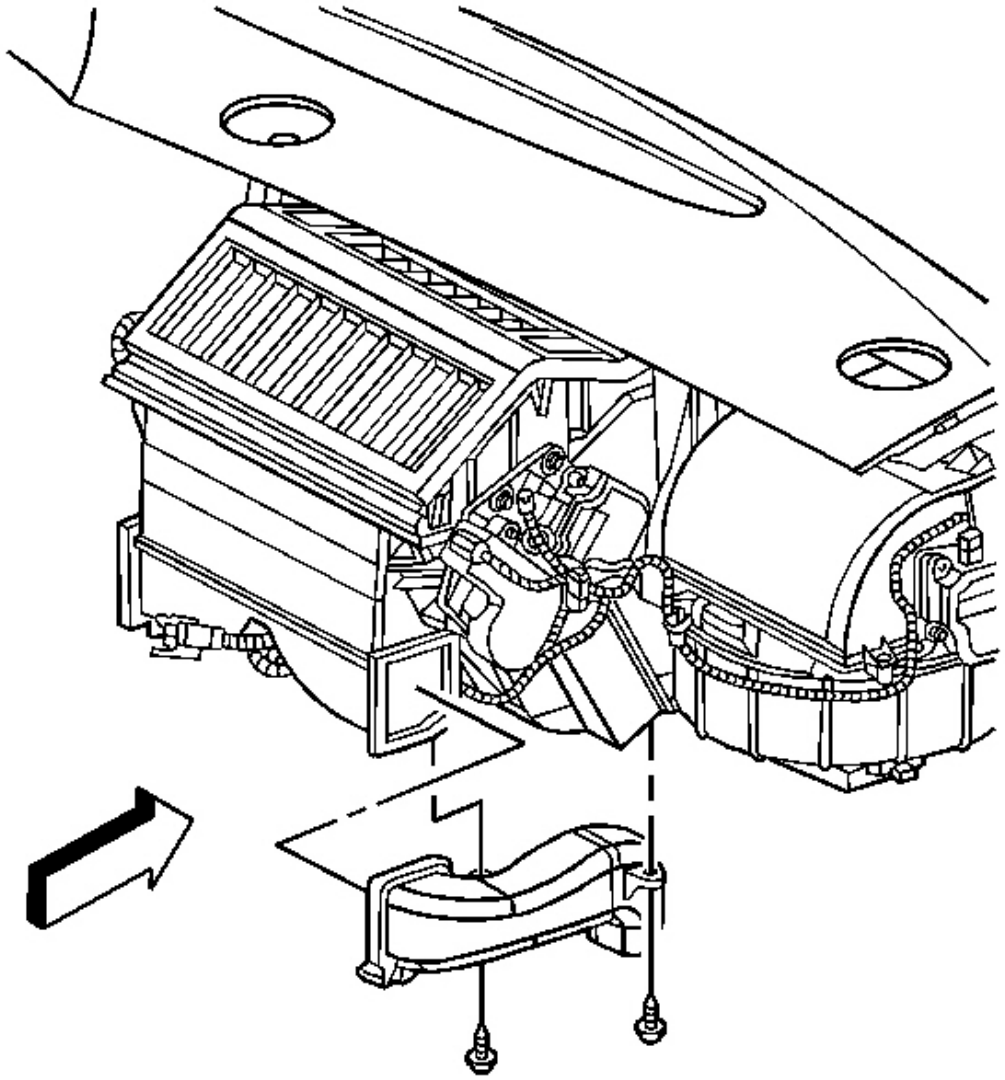

Fig. 207: Air Outlet Duct & Retaining Screws
Courtesy of GENERAL MOTORS CORP.

1. Install the air outlet duct.

2. Connect the air outlet duct to the HVAC module.

NOTE: Refer to Fastener Notice in Cautions and Notices.

3. Install the air outlet duct retaining screws.

   Tighten: Tighten the screws to 1.6 N.m (14 lb in).

4. Install the I/P assembly. Refer to **Instrument Panel (I/P) Carrier Replacement** in Instrument Panel, Gages and Console.

AIR OUTLET DUCT REPLACEMENT - REAR FLOOR, LH

Removal Procedure

1. Remove the I/P assembly. Refer to **Instrument Panel (I/P) Carrier Replacement** in Instrument Panel, Gages and Console.

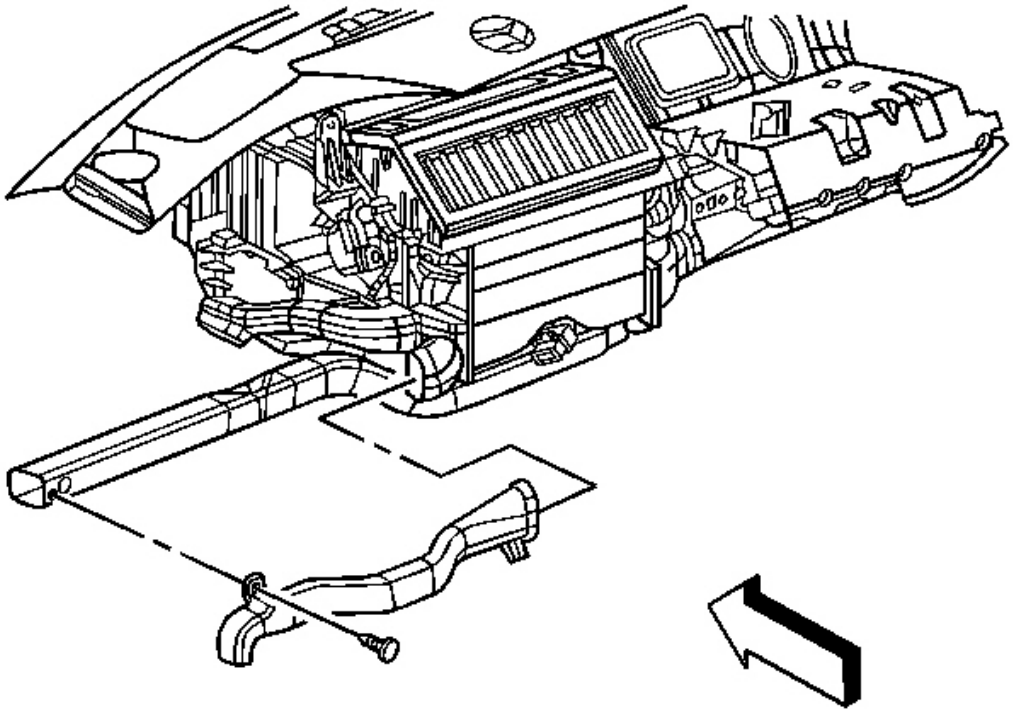

Fig. 208: Identifying Floor Air Outlet Duct & Retainer At I/P Beam
Courtesy of GENERAL MOTORS CORP.

2. Remove the retainer securing the left floor air outlet duct to the lower I/P beam.
3. Disconnect the air outlet duct from the air outlet duct.

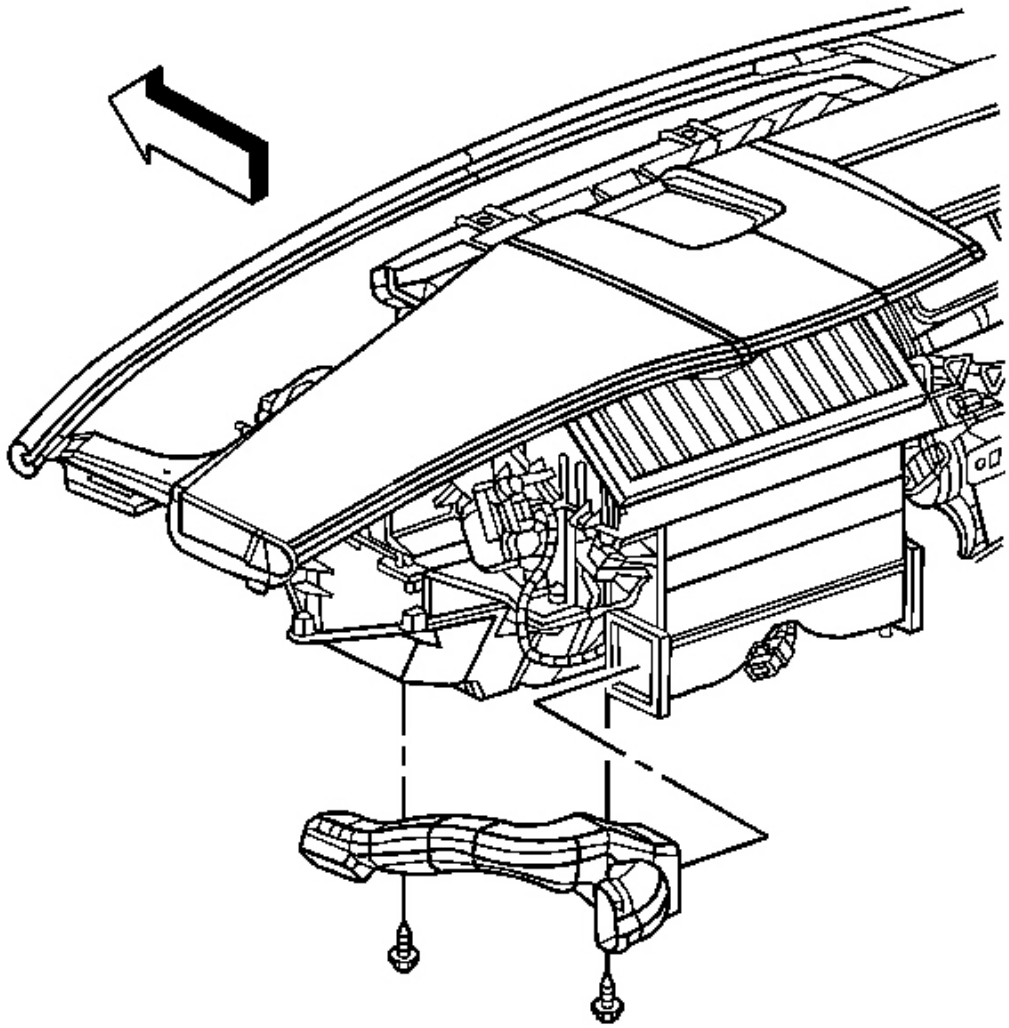

Fig. 209: Floor Air Outlet Duct & Retaining Screws
Courtesy of GENERAL MOTORS CORP.

4. Remove the air outlet duct retaining screws.
5. Disconnect the air outlet duct from the HVAC module.
6. Remove the air outlet duct.

Installation Procedure

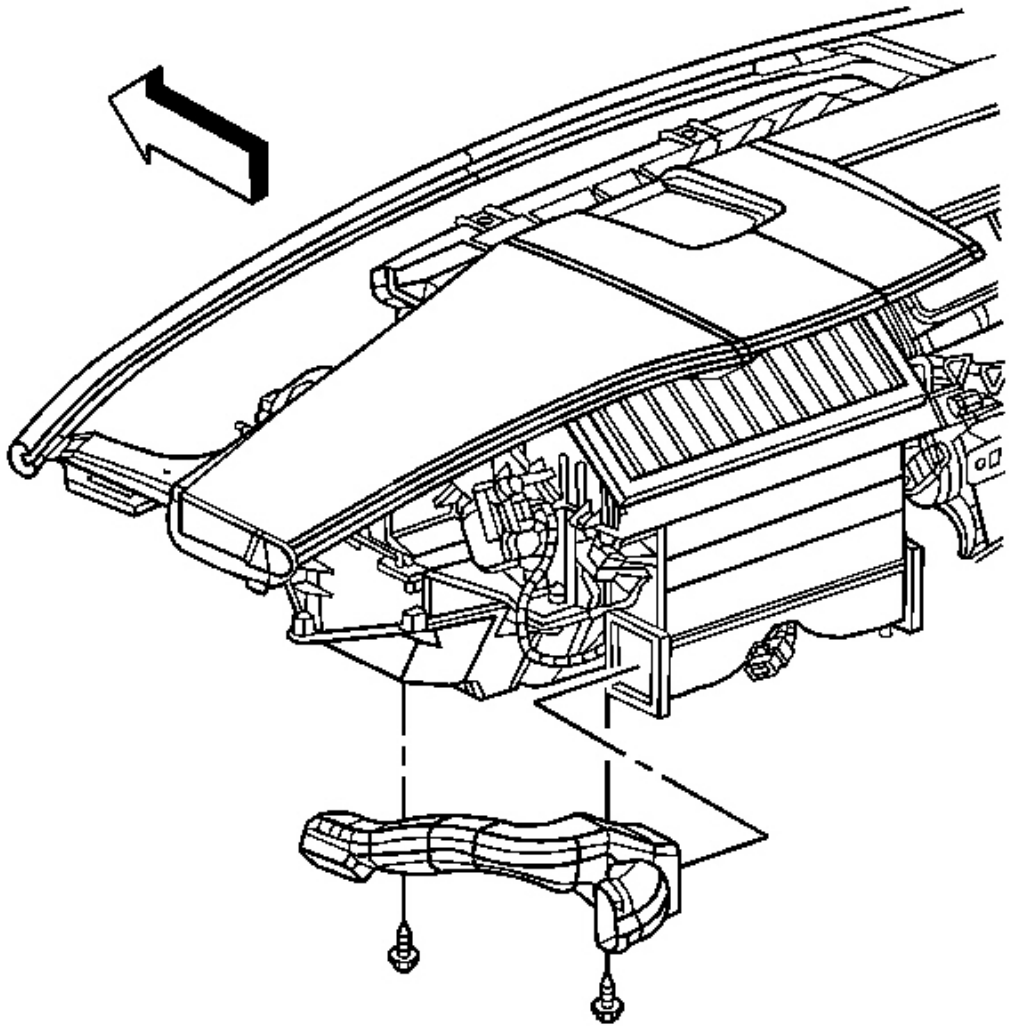

Fig. 210: Floor Air Outlet Duct & Retaining Screws
Courtesy of GENERAL MOTORS CORP.

1. Install the air outlet duct.
2. Connect the air outlet duct to the HVAC module.

NOTE: Refer to Fastener Notice in Cautions and Notices.

3. Install the air outlet duct retaining screws.

   Tighten: Tighten the screws to 1.6 N.m (14 lb in).

4. Connect the left floor air outlet duct to the left rear floor air outlet duct.

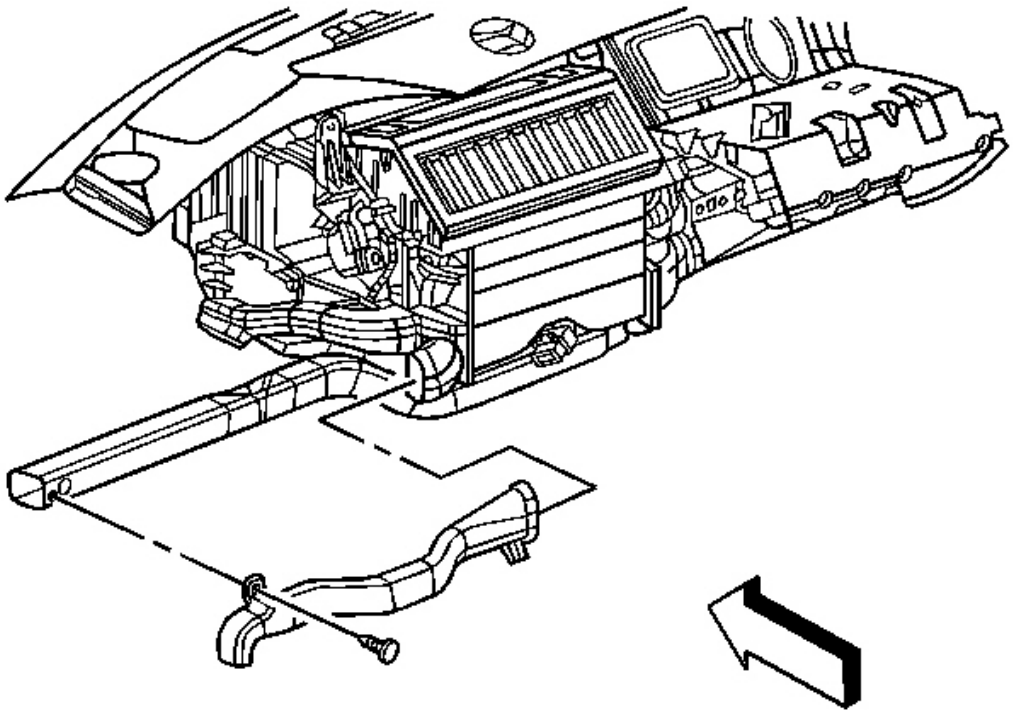

Fig. 211: Identifying Floor Air Outlet Duct & Retainer At I/P Beam
Courtesy of GENERAL MOTORS CORP.

5. Install the retainer securing the air outlet duct to the lower I/P beam.
6. Install the I/P assembly. Refer to **Instrument Panel (I/P) Carrier Replacement** in Instrument Panel, Gages and Console.

AIR TEMPERATURE DOOR REPLACEMENT - RIGHT

Tools Required

J 39400-A Halogen Leak Detector

Removal Procedure

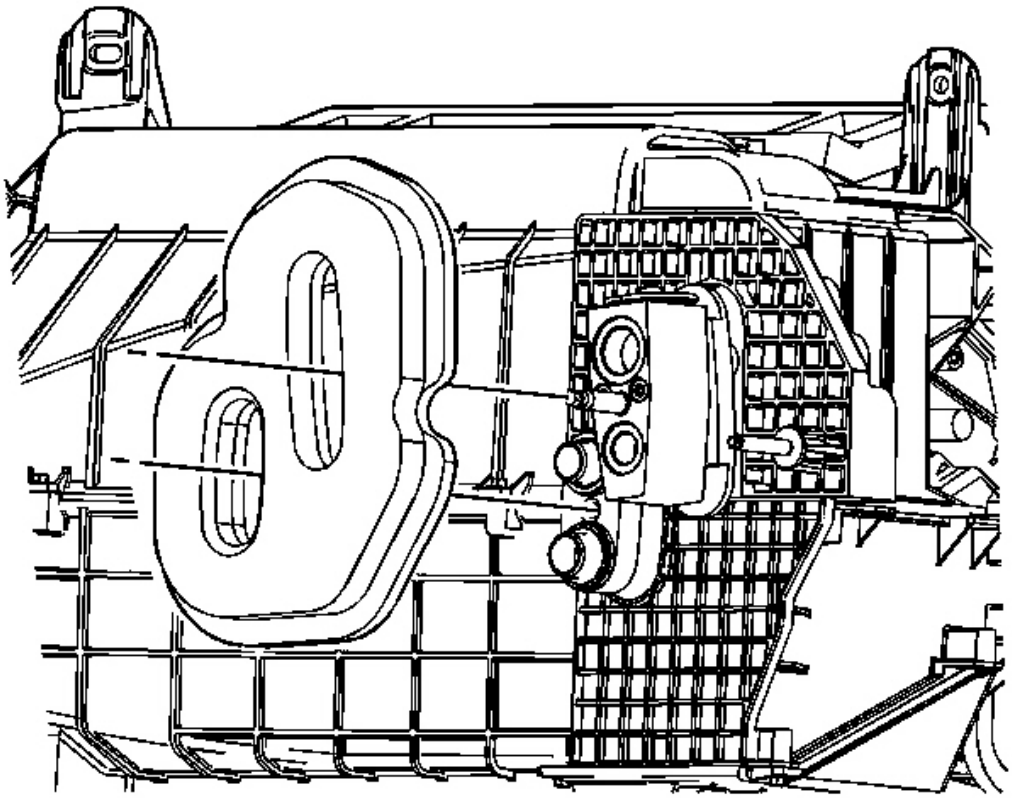

Fig. 212: Identifying HVAC Module Assembly Foam Seal
Courtesy of GENERAL MOTORS CORP.

1. Remove the HVAC module. Refer to **HVAC Module Assembly Replacement**.
2. Remove and discard the HVAC module assembly foam seal.

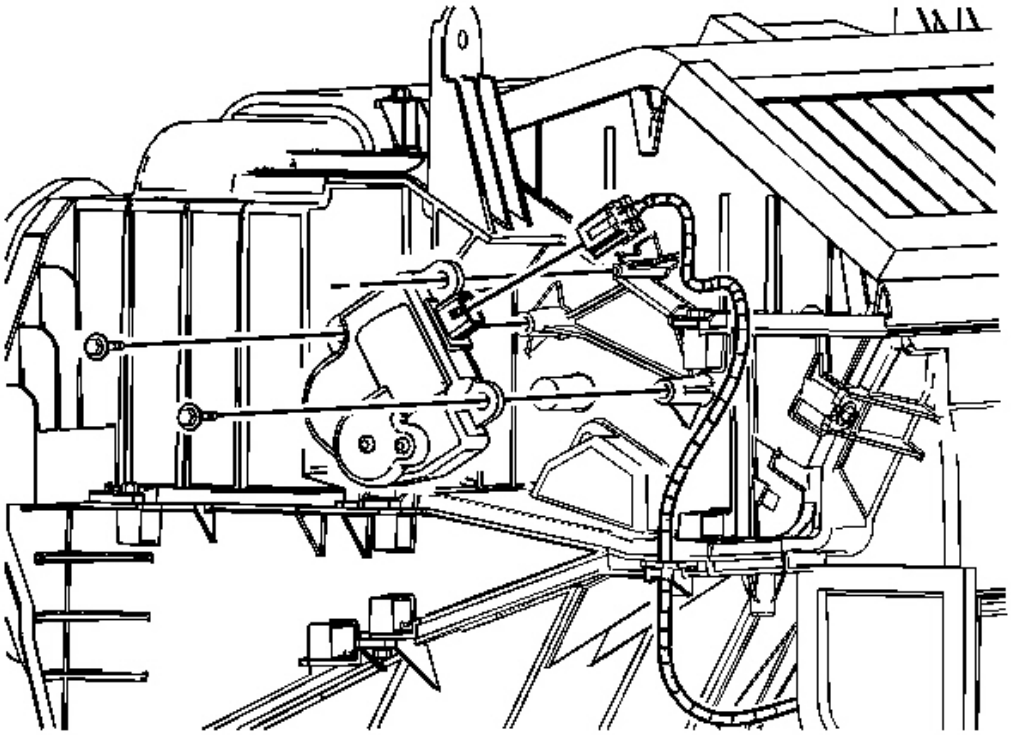

Fig. 213: Identifying LH Air Temperature Actuator & Components
Courtesy of GENERAL MOTORS CORP.

3. Disconnect the LH air temperature actuator electrical connector.
4. Remove the LH air temperature actuator screws.
5. Remove the LH air temperature actuator.

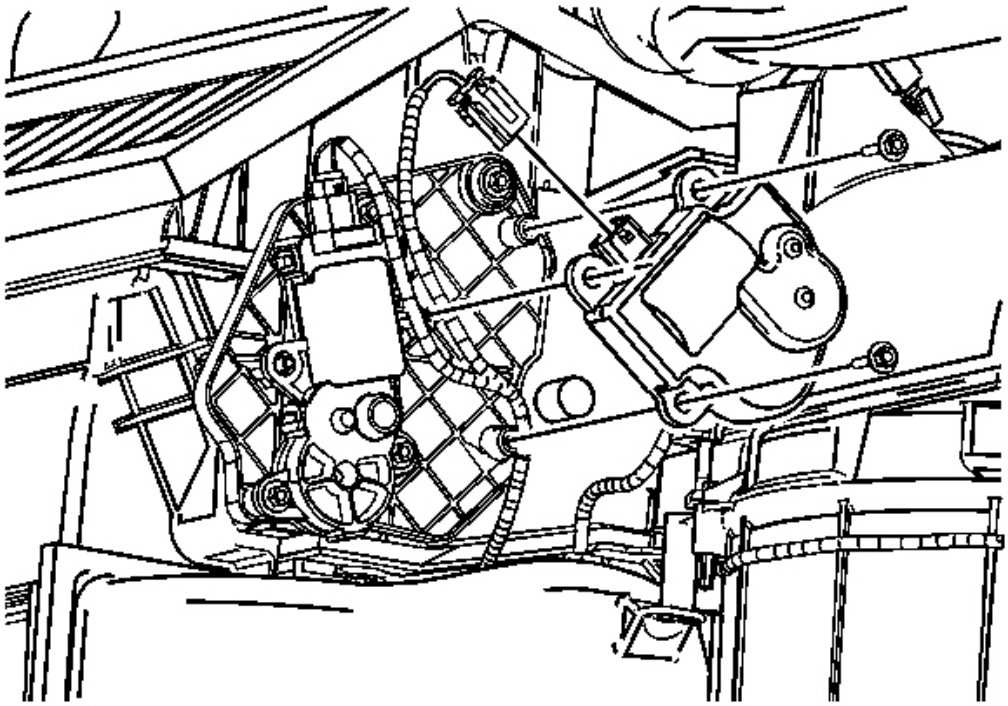

Fig. 214: View Of RH Air Temperature Actuator
Courtesy of GENERAL MOTORS CORP.

6. Disconnect the RH air temperature actuator electrical connector.
7. Remove the RH air temperature actuator screws.
8. Remove the RH air temperature actuator.

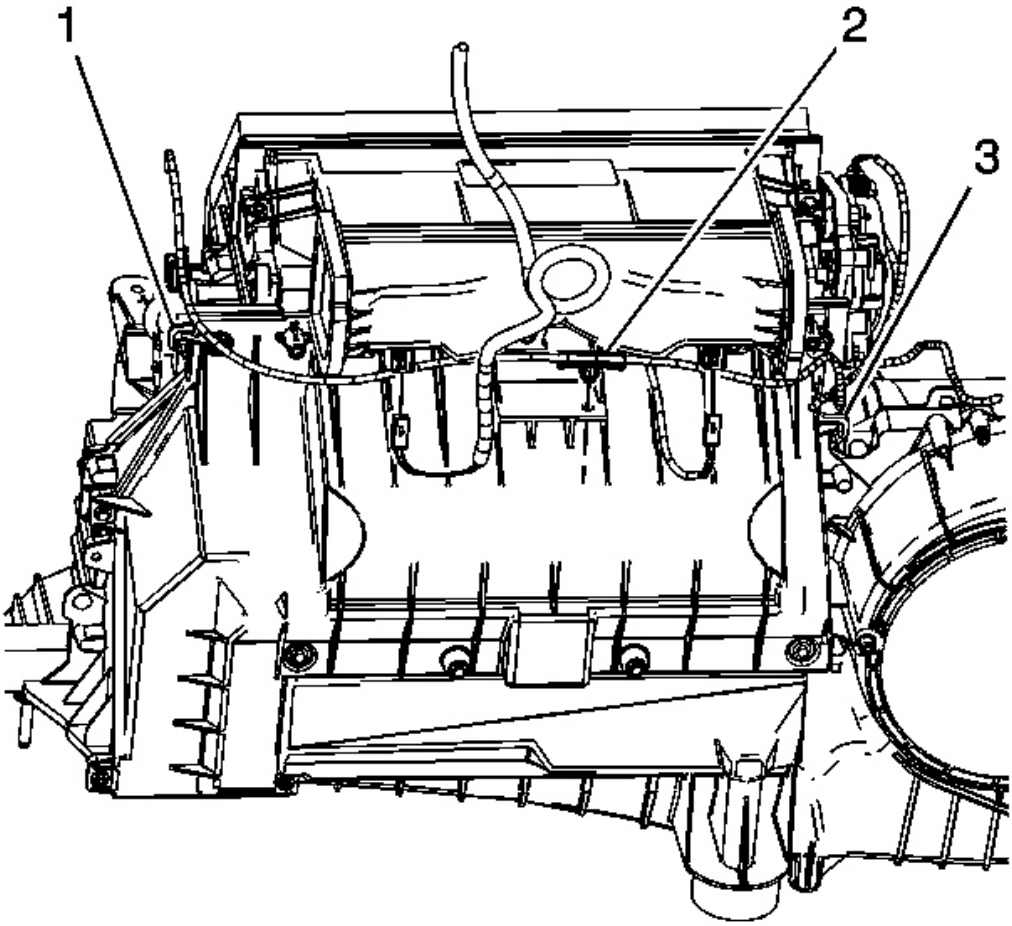

Fig. 215: Identifying Heater Core Cover Wire Harness Retainer & HVAC Module Wiring Harness Retainer Pin
Courtesy of GENERAL MOTORS CORP.

9. Disconnect the discharge temperature management (DTM) sensor electrical connectors.
10. Disconnect the HVAC module wiring harness retainer pin (2) from the HVAC module.
11. Disconnect the wiring harness from the heater core cover wire harness retainer (1) and reposition the wiring harness aside.
12. Disconnect the wiring harness from the heater core cover wire harness retainer (3) and reposition the wiring harness aside.

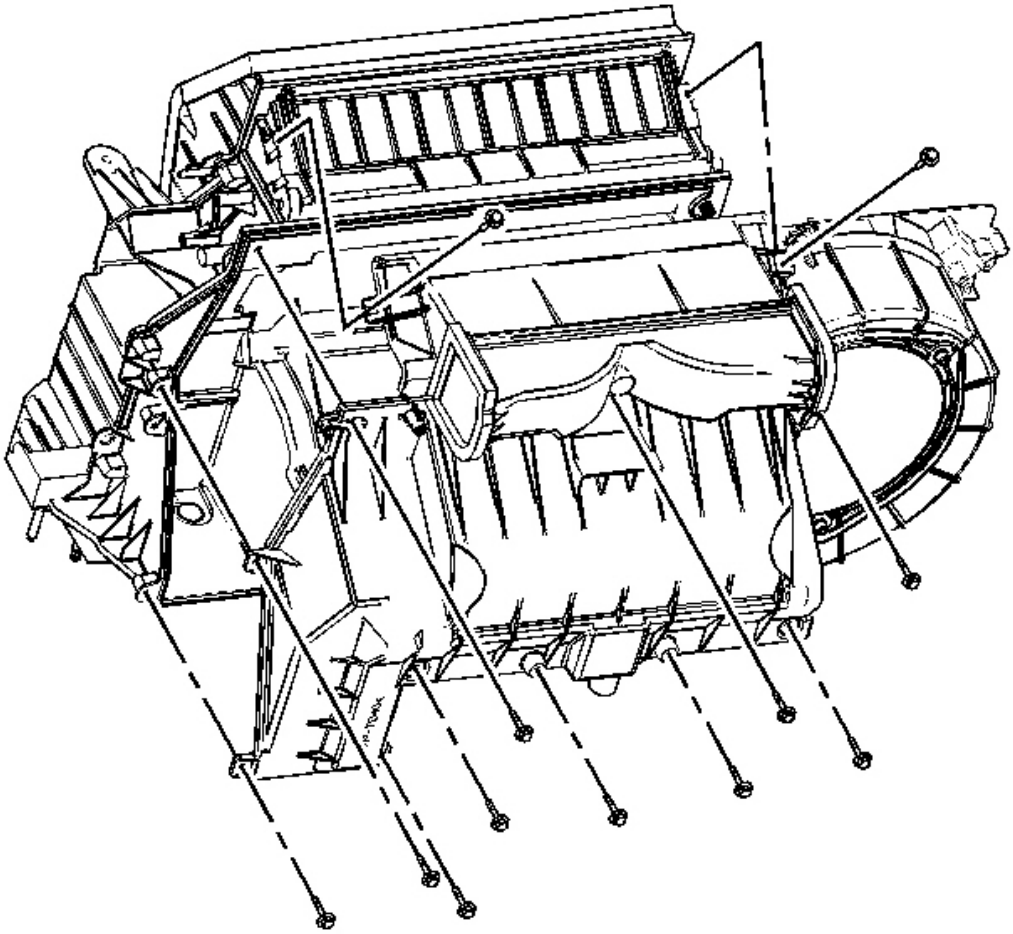

Fig. 216: Identifying Heater Cover Screws
Courtesy of GENERAL MOTORS CORP.

13. Remove the heater cover screws.
14. Remove the heater cover from the HVAC module.

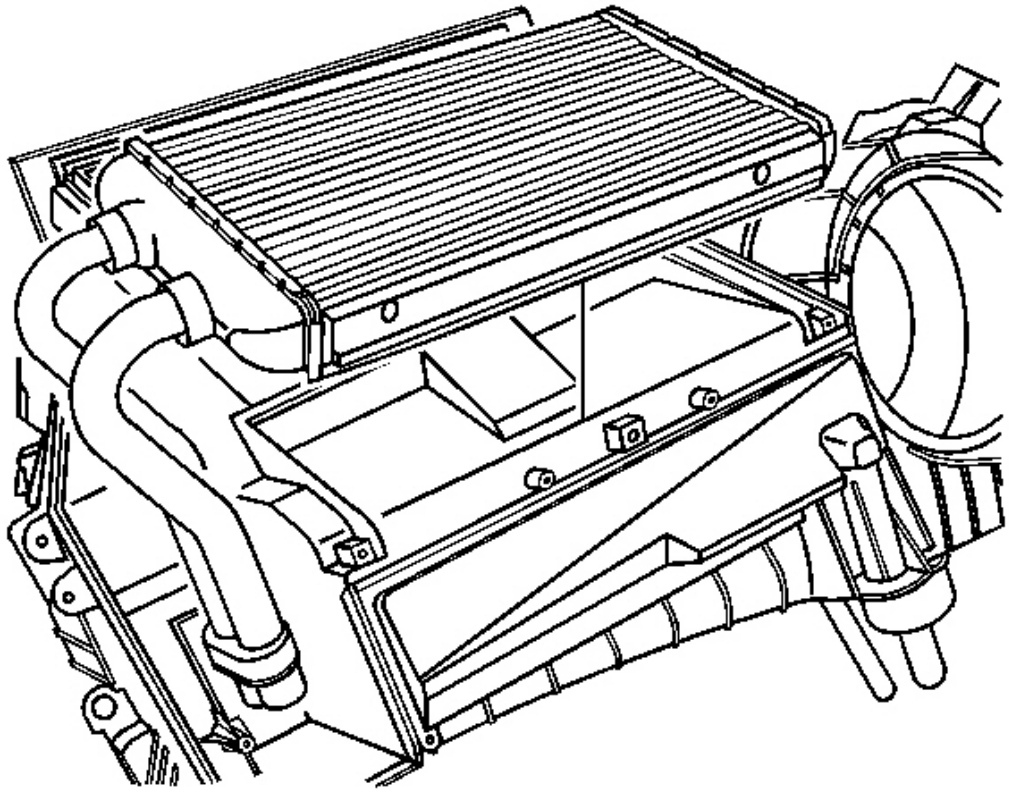

Fig. 217: Identifying Heater Core & HVAC Module
Courtesy of GENERAL MOTORS CORP.

15. Remove the heater core from the HVAC module.

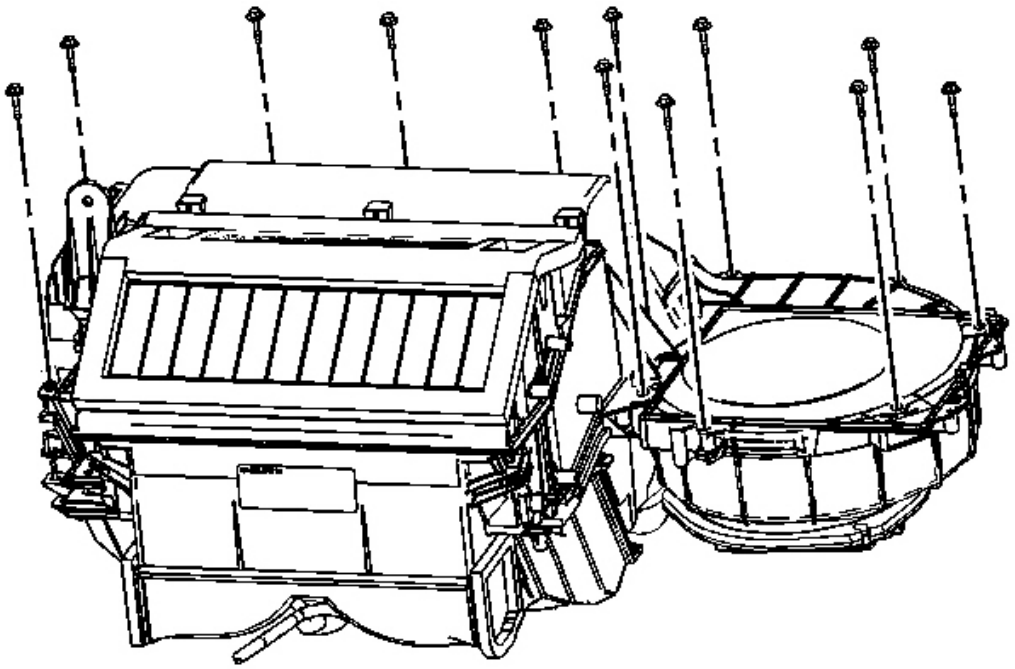

Fig. 218: Identifying HVAC Module Case Retaining Screws
Courtesy of GENERAL MOTORS CORP.

16. Remove the HVAC module case retaining screws.

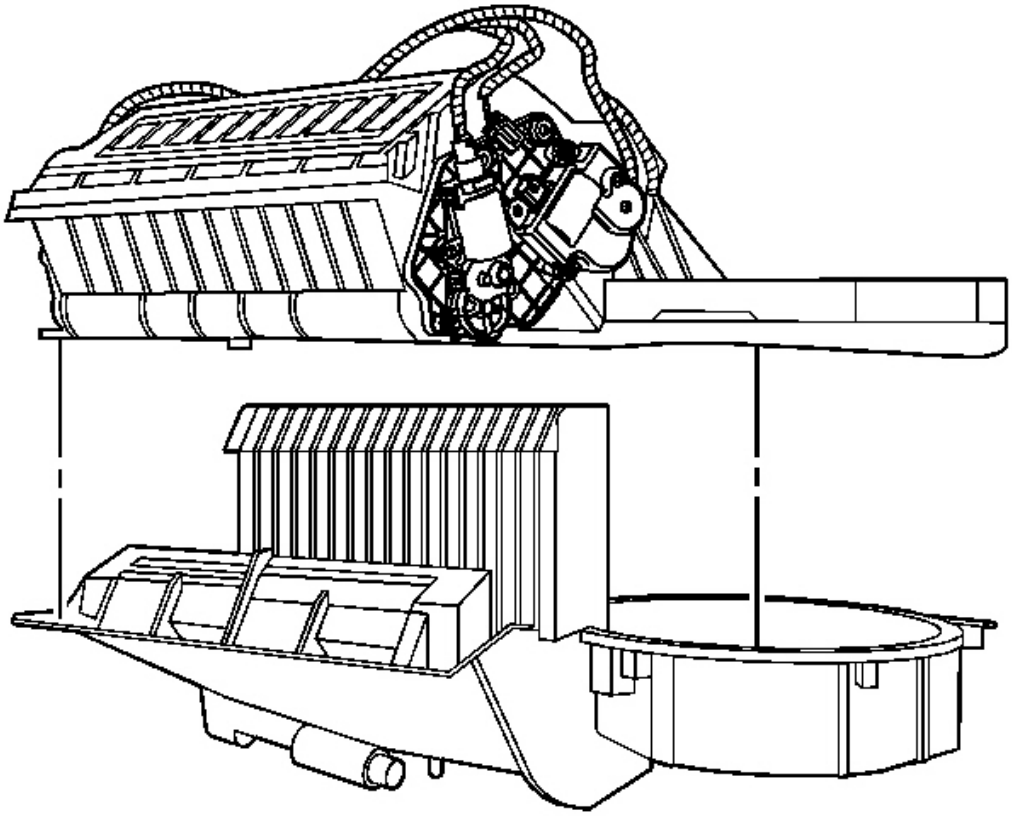

Fig. 219: HVAC Module Upper Case & HVAC Module Lower Case
Courtesy of GENERAL MOTORS CORP.

17. Separate the HVAC module upper case from the HVAC module lower case.

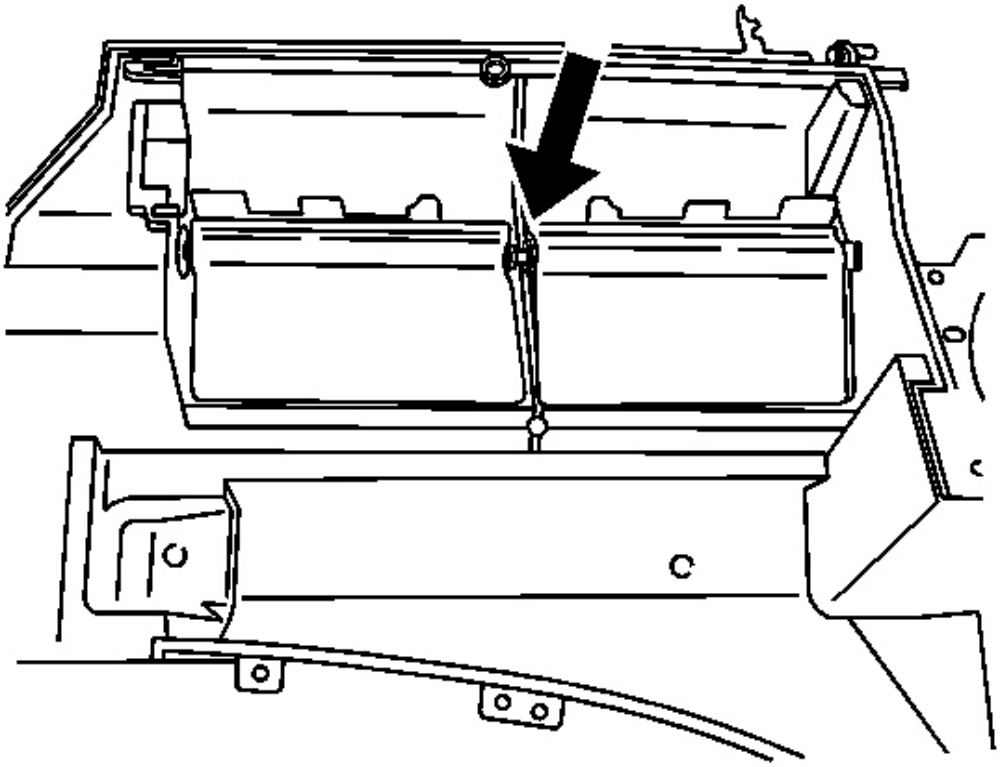

Fig. 220: Identifying LH & RH Air Temperature Doors
Courtesy of GENERAL MOTORS CORP.

18. Lift up on the LH and RH air temperature doors to disconnect from one another.

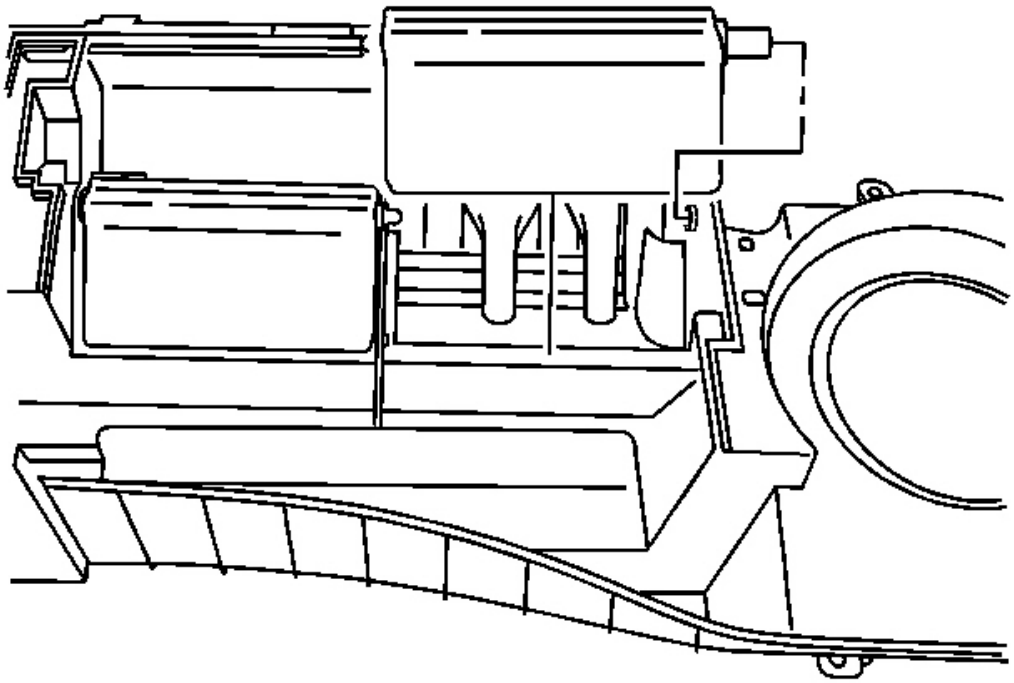

Fig. 221: Removing/Installing RH Air Temperature Door
Courtesy of GENERAL MOTORS CORP.

19. Remove the RH air temperature door from the HVAC module.

Installation Procedure

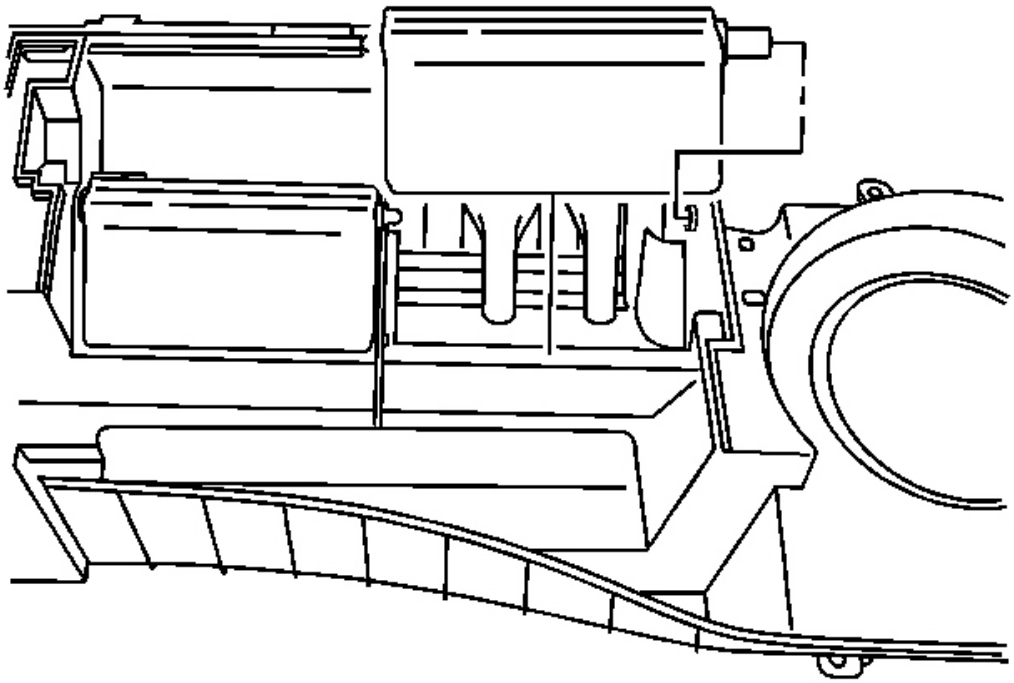

Fig. 222: Removing/Installing RH Air Temperature Door
Courtesy of GENERAL MOTORS CORP.

1. Install the RH air temperature door to the HVAC module.

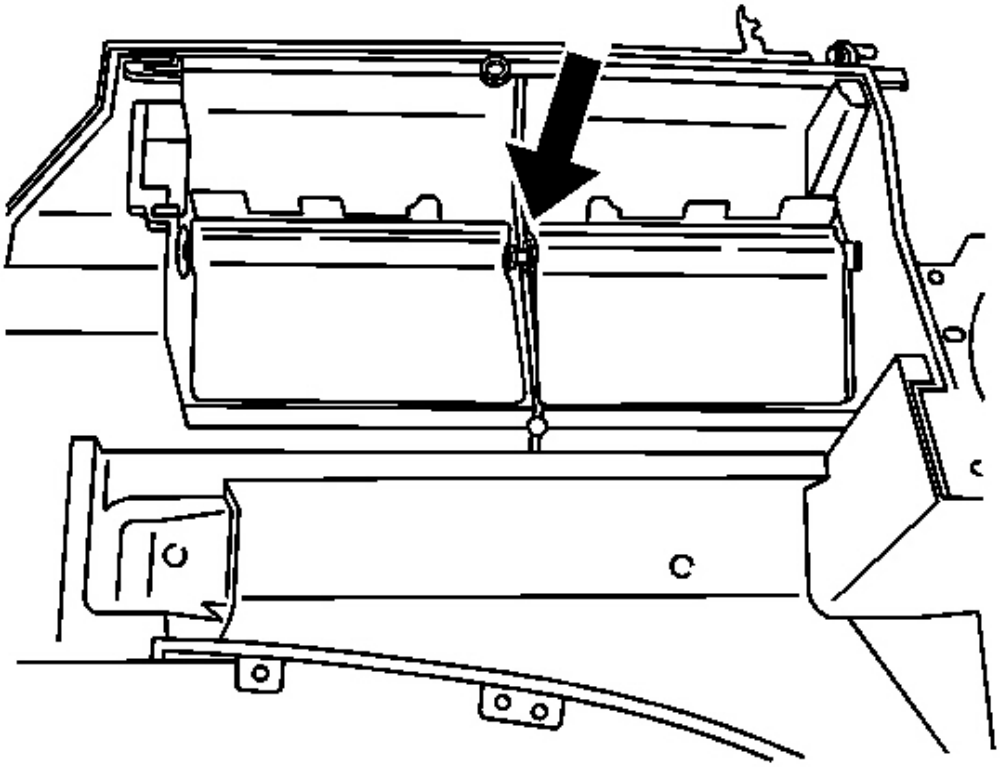

Fig. 223: Identifying LH & RH Air Temperature Doors
Courtesy of GENERAL MOTORS CORP.

2. Lift up on the LH and RH air temperature doors to connect to one another.

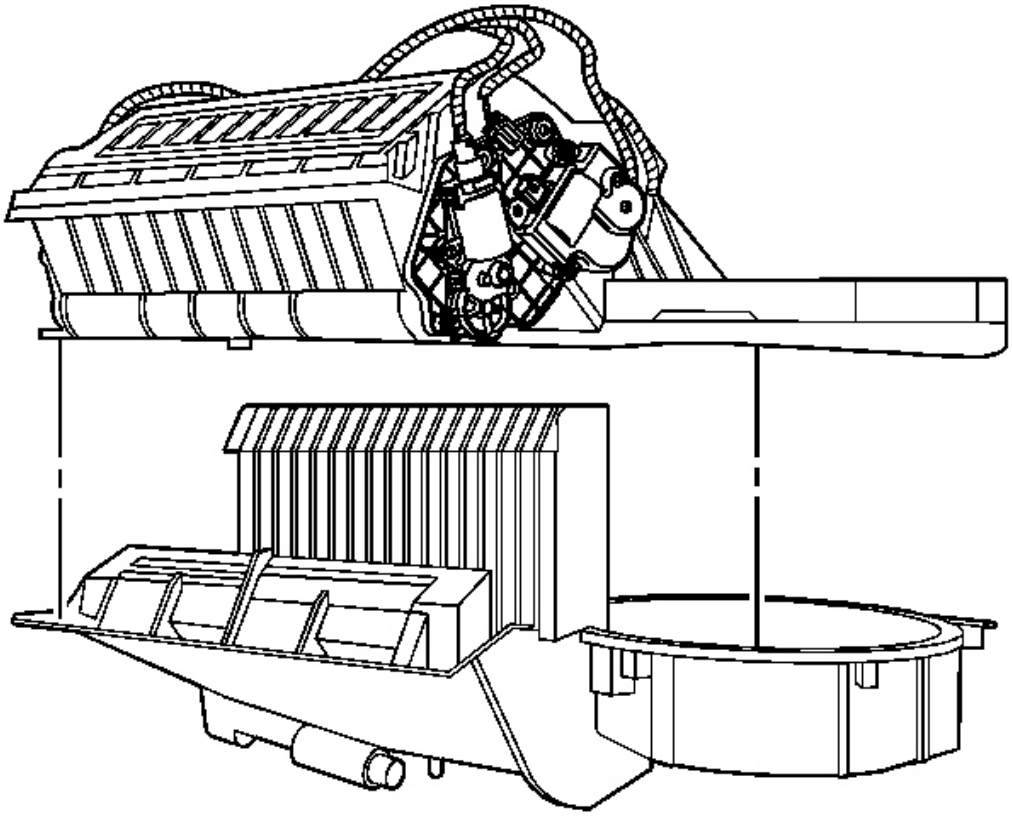

Fig. 224: HVAC Module Upper Case & HVAC Module Lower Case
Courtesy of GENERAL MOTORS CORP.

3. Install the HVAC module upper case to the HVAC module lower case.

NOTE: Refer to Fastener Notice in Cautions and Notices.

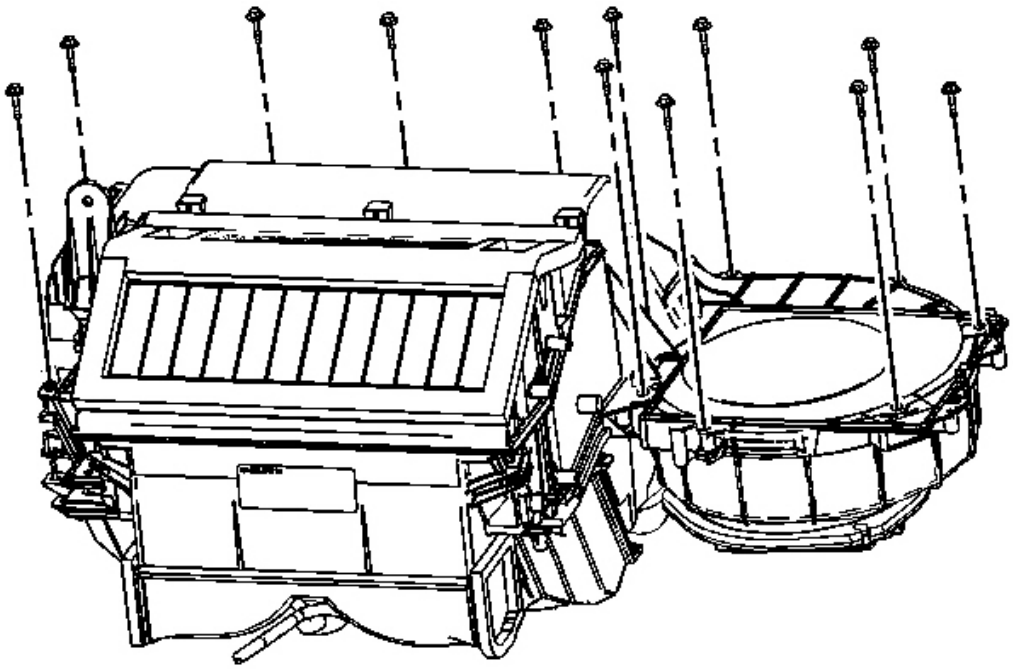

Fig. 225: Identifying HVAC Module Case Retaining Screws
Courtesy of GENERAL MOTORS CORP.

4. Install the HVAC module case retaining screws.

   Tighten: Tighten the screws to 1.6 N.m (14 lb in).

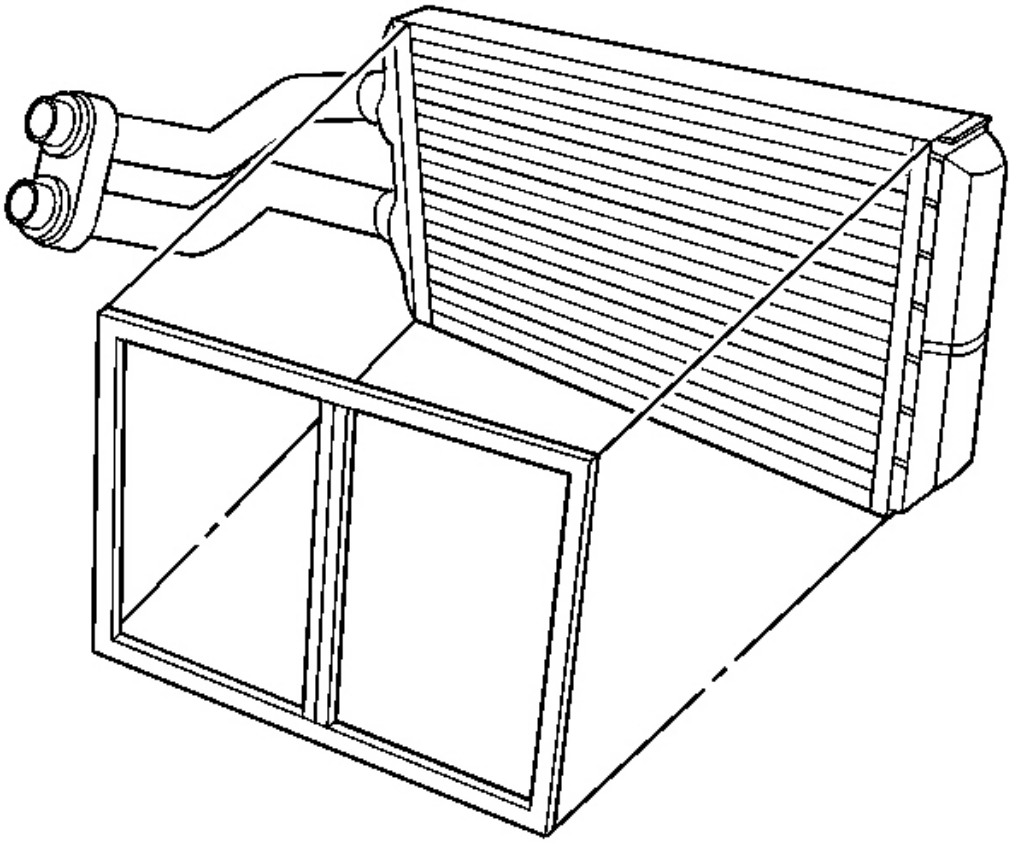

Fig. 226: Identifying Foam Sealer
Courtesy of GENERAL MOTORS CORP.

5. Install a new foam seal to the heater core.

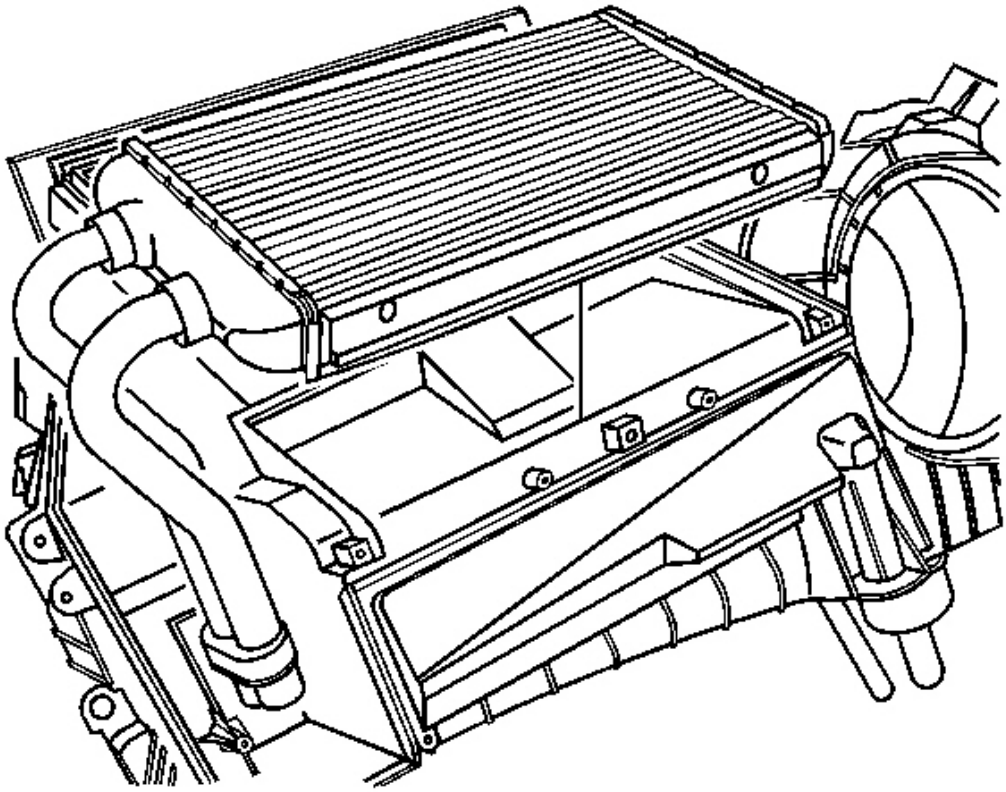

Fig. 227: Identifying Heater Core & HVAC Module
Courtesy of GENERAL MOTORS CORP.

6. Install the heater core to the HVAC module.
7. Install the heater cover to the HVAC module.

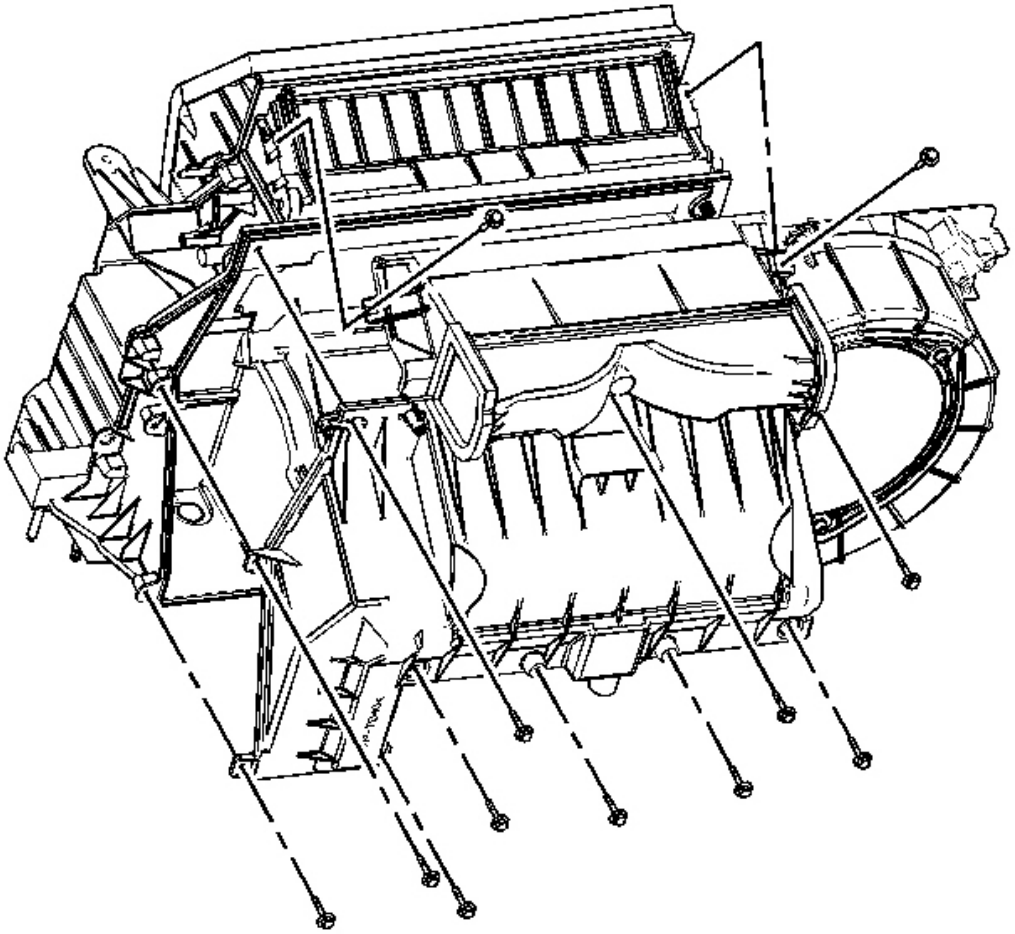

Fig. 228: Identifying Heater Cover Screws
Courtesy of GENERAL MOTORS CORP.

8. Install the heater cover screws.

   Tighten: Tighten the screws to 1.6 N.m (14 lb in).

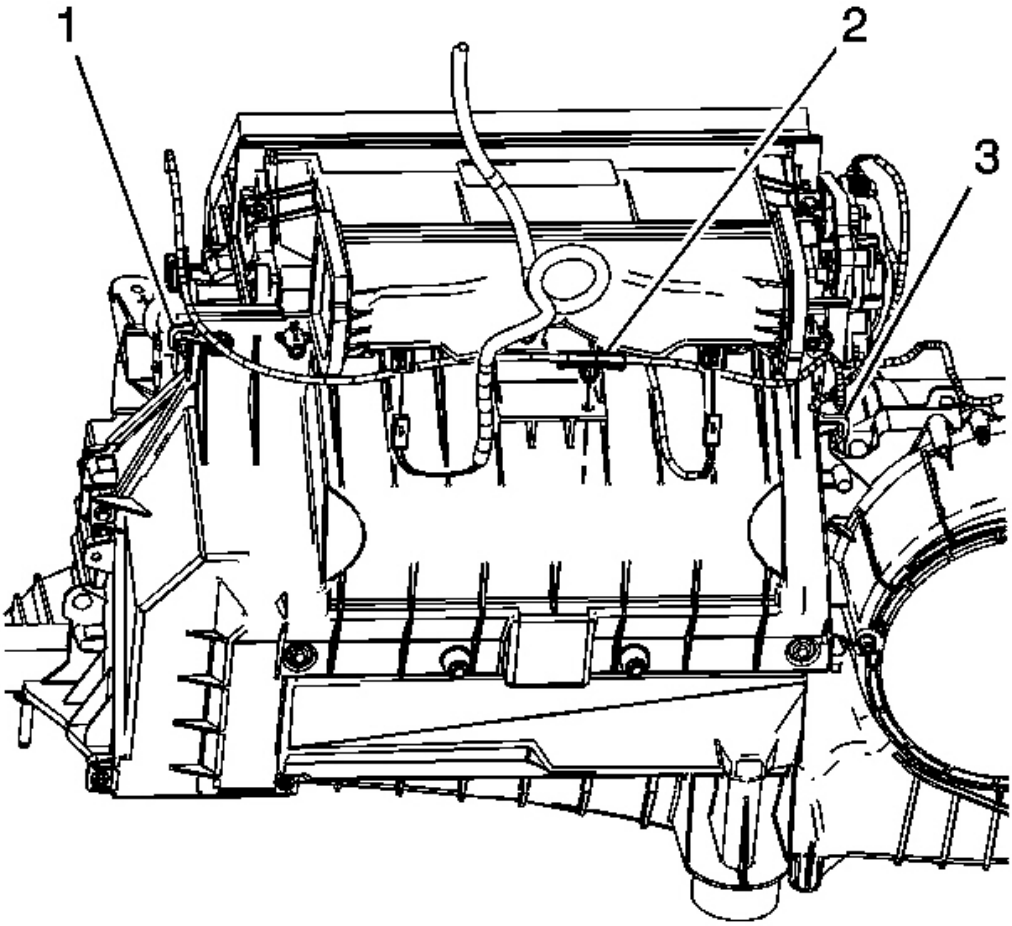

Fig. 229: Identifying Heater Core Cover Wire Harness Retainer & HVAC Module Wiring Harness Retainer Pin
Courtesy of GENERAL MOTORS CORP.

9. Reposition the HVAC wiring harness and connect the wiring harness to the heater core cover wiring harness retainer (1).
10. Reposition the HVAC wiring harness and connect the wiring harness to the heater core cover wiring harness retainer (3).
11. Connect the HVAC module wiring harness retainer pin (2) to the HVAC module.
12. Connect the discharge temperature management (DTM) sensor electrical connectors.
13. Install the RH air temperature actuator.

14. Install the RH air temperature actuator screws.

    Tighten: Tighten the screws to 1.6 N.m (14 lb in).

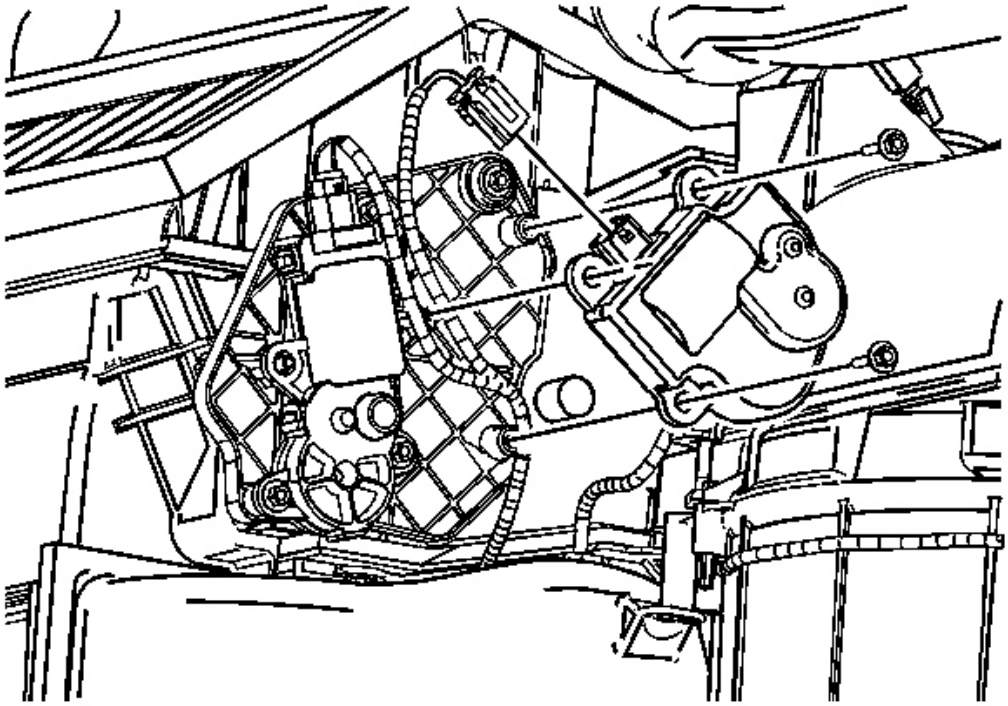

Fig. 230: View Of RH Air Temperature Actuator
Courtesy of GENERAL MOTORS CORP.

15. Connect the RH air temperature actuator electrical connector.
16. Install the LH air temperature actuator.
17. Install the LH air temperature actuator screws.

    Tighten: Tighten the screws to 1.6 N.m (14 lb in).

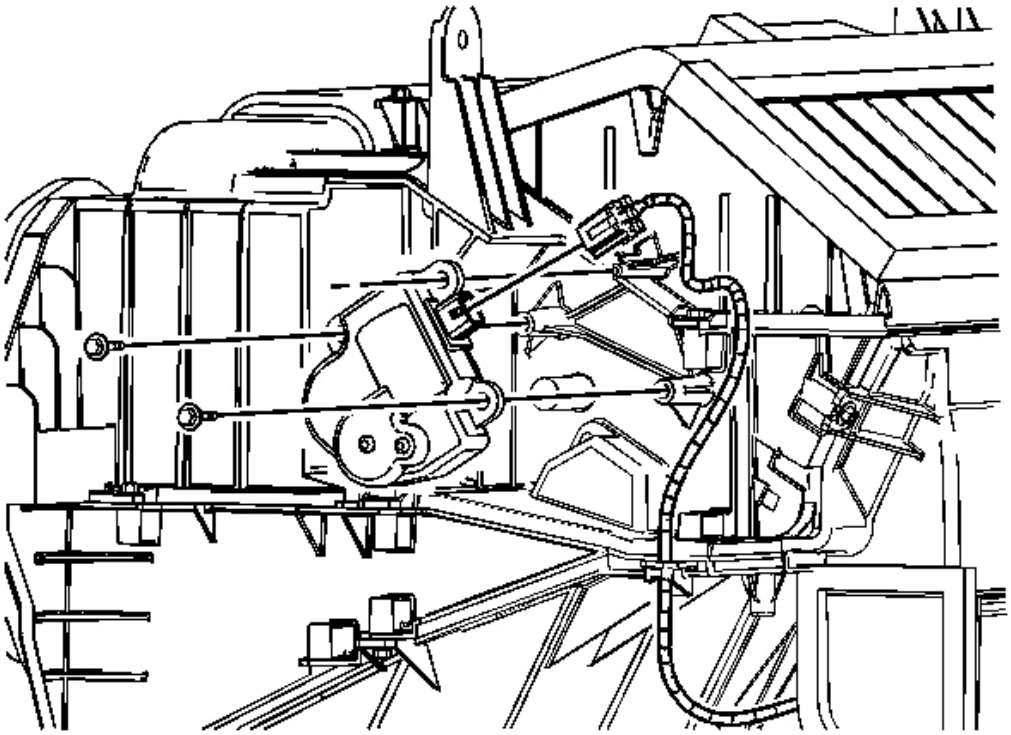

Fig. 231: Identifying LH Air Temperature Actuator & Components
Courtesy of GENERAL MOTORS CORP.

18. Connect the LH air temperature actuator electrical connector.
19. Install the HVAC module. Refer to **HVAC Module Assembly Replacement**.

AIR TEMPERATURE DOOR REPLACEMENT - LEFT

Tools Required

J 39400-A Halogen Leak Detector

Removal Procedure

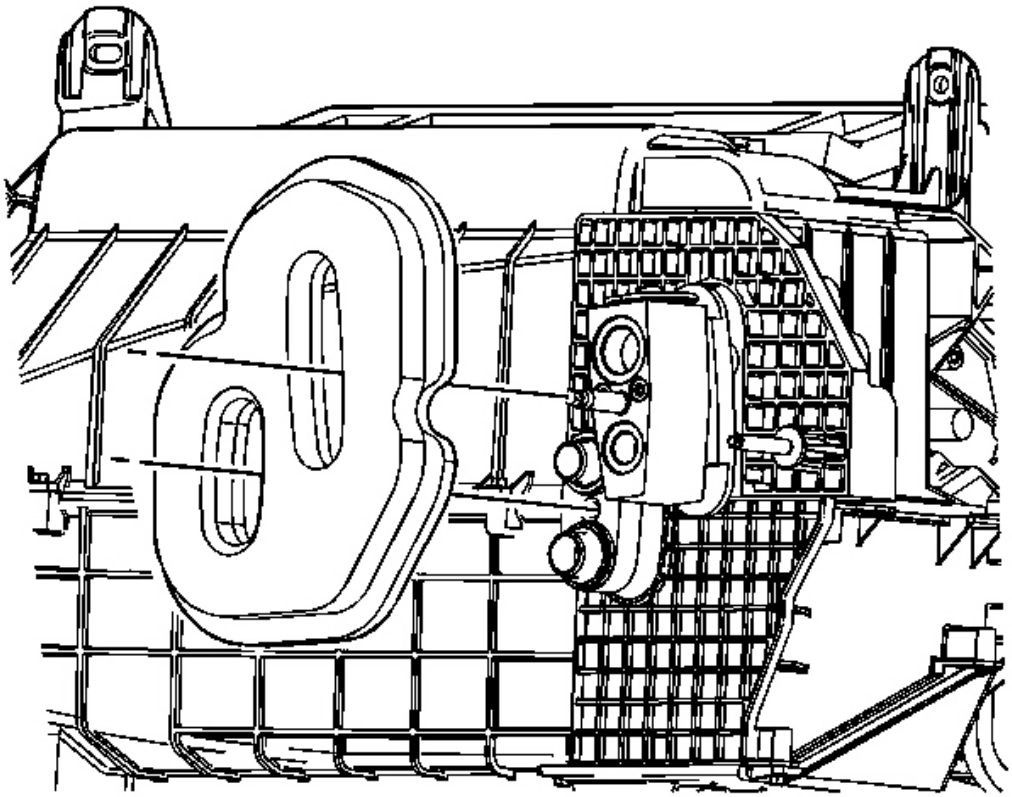

Fig. 232: Identifying HVAC Module Assembly Foam Seal
Courtesy of GENERAL MOTORS CORP.

1. Remove the HVAC module. Refer to **HVAC Module Assembly Replacement**.
2. Remove and discard the HVAC module assembly foam seal.

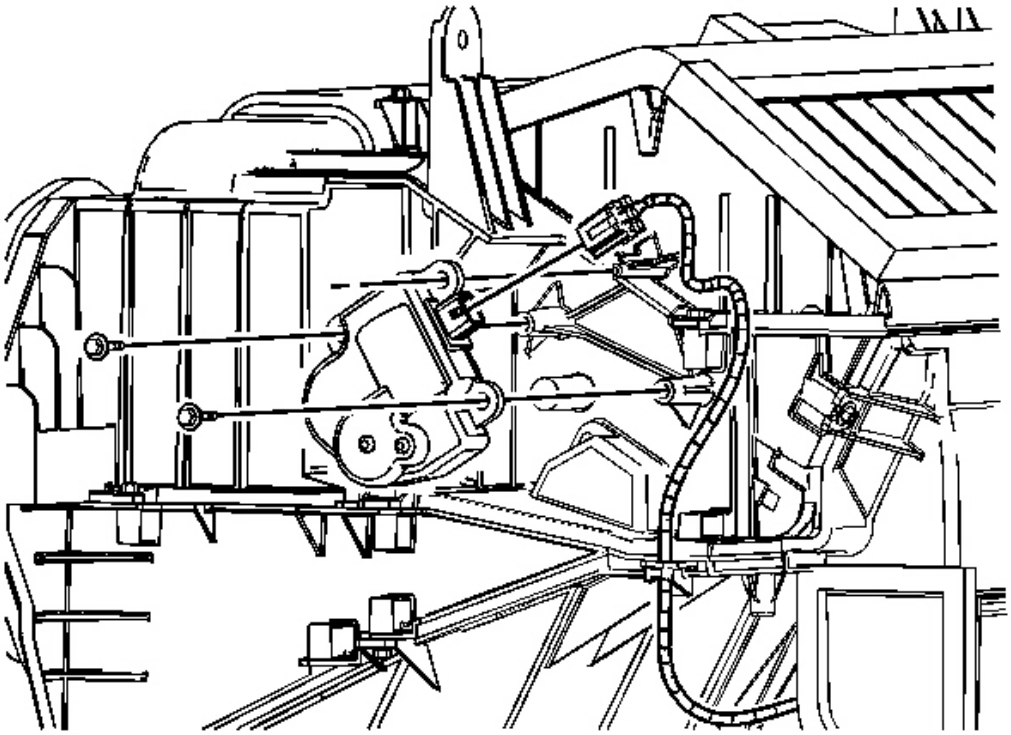

Fig. 233: Identifying LH Air Temperature Actuator & Components
Courtesy of GENERAL MOTORS CORP.

3. Disconnect the LH air temperature actuator electrical connector.
4. Remove the LH air temperature actuator screws.
5. Remove the LH air temperature actuator.

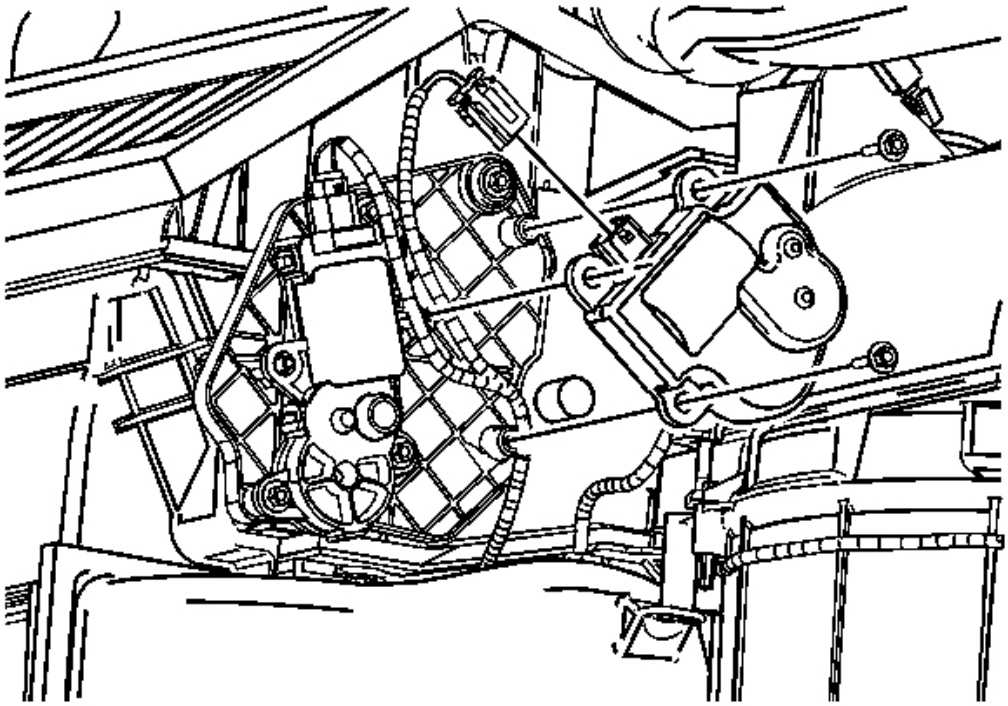

Fig. 234: View Of RH Air Temperature Actuator
Courtesy of GENERAL MOTORS CORP.

6. Disconnect the RH air temperature actuator electrical connector.
7. Remove the RH air temperature actuator screws.
8. Remove the RH air temperature actuator.

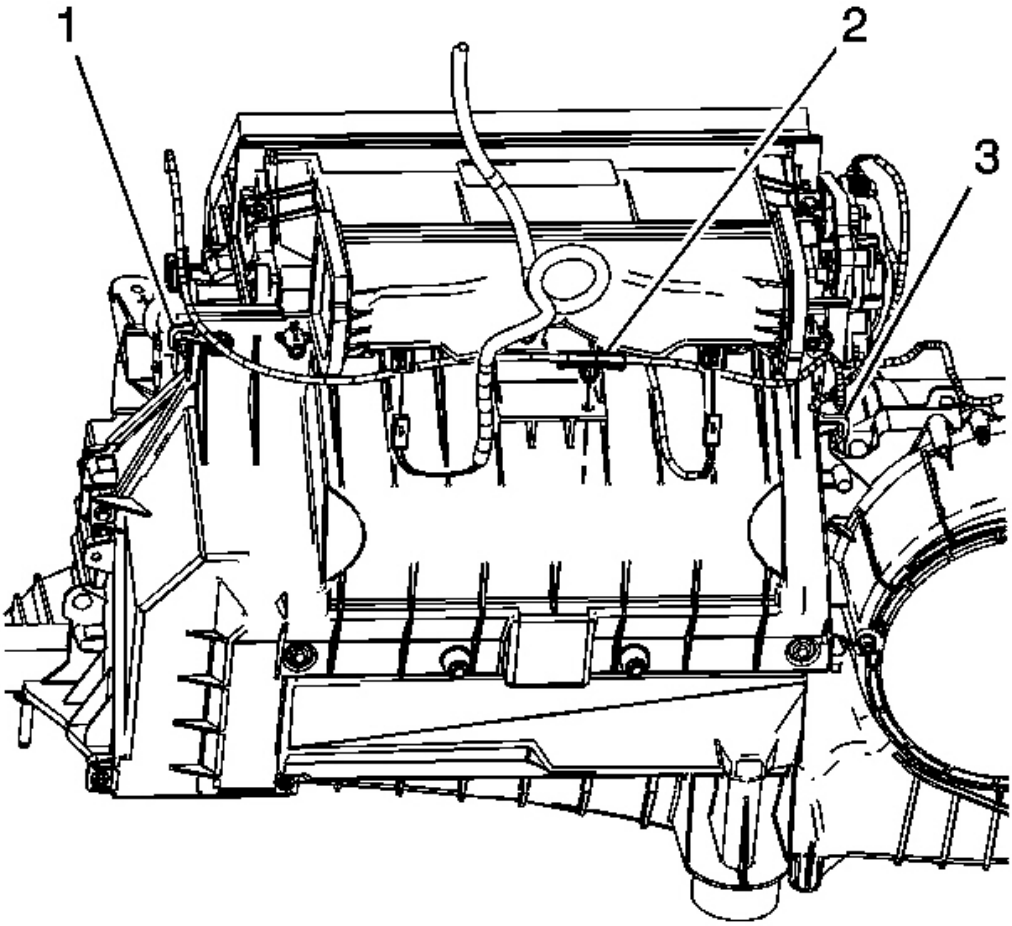

Fig. 235: Identifying Heater Core Cover Wire Harness Retainer & HVAC Module Wiring Harness Retainer Pin
Courtesy of GENERAL MOTORS CORP.

9. Disconnect the discharge temperature management (DTM) sensor electrical connectors.
10. Disconnect the HVAC module wiring harness retainer pin (2) from the HVAC module.
11. Disconnect the wiring harness from the heater core cover wire harness retainer (1) and reposition the wiring harness aside.
12. Disconnect the wiring harness from the heater core cover wire harness retainer (3) and reposition the wiring harness aside.

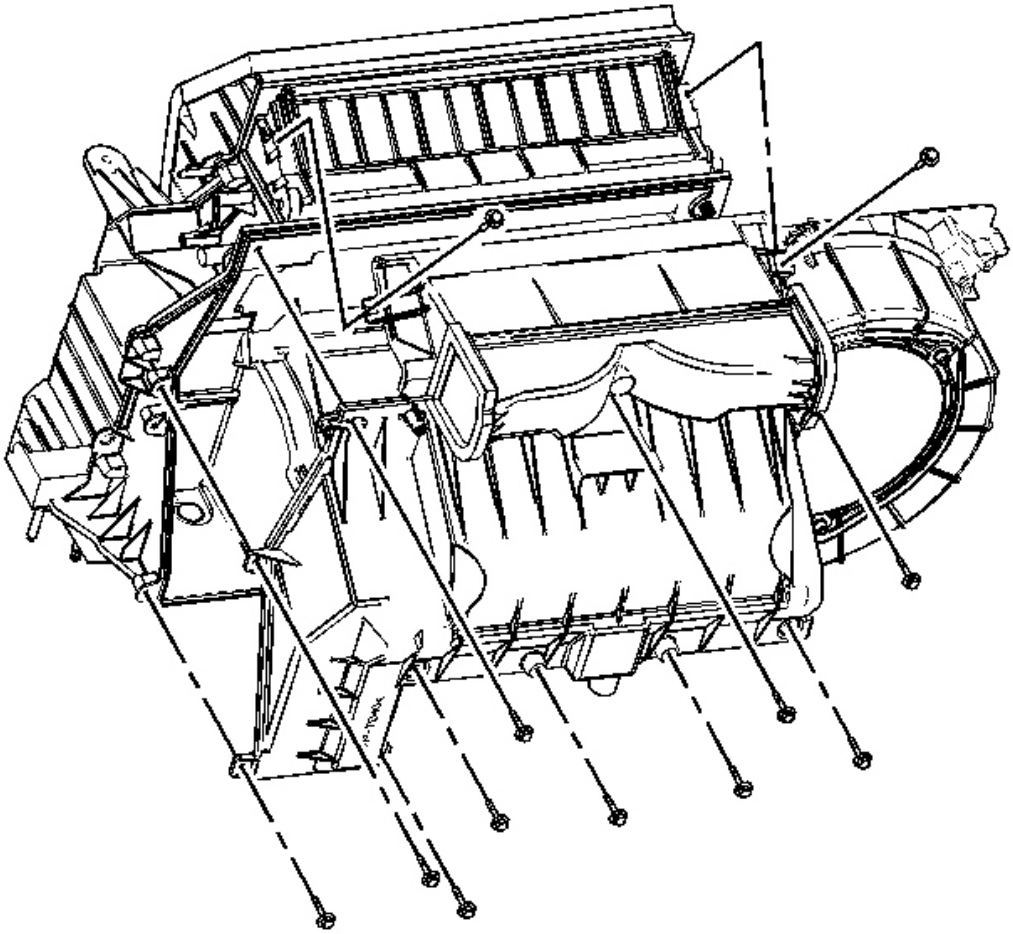

Fig. 236: Identifying Heater Cover Screws
Courtesy of GENERAL MOTORS CORP.

13. Remove the heater cover screws.
14. Remove the heater cover from the HVAC module.

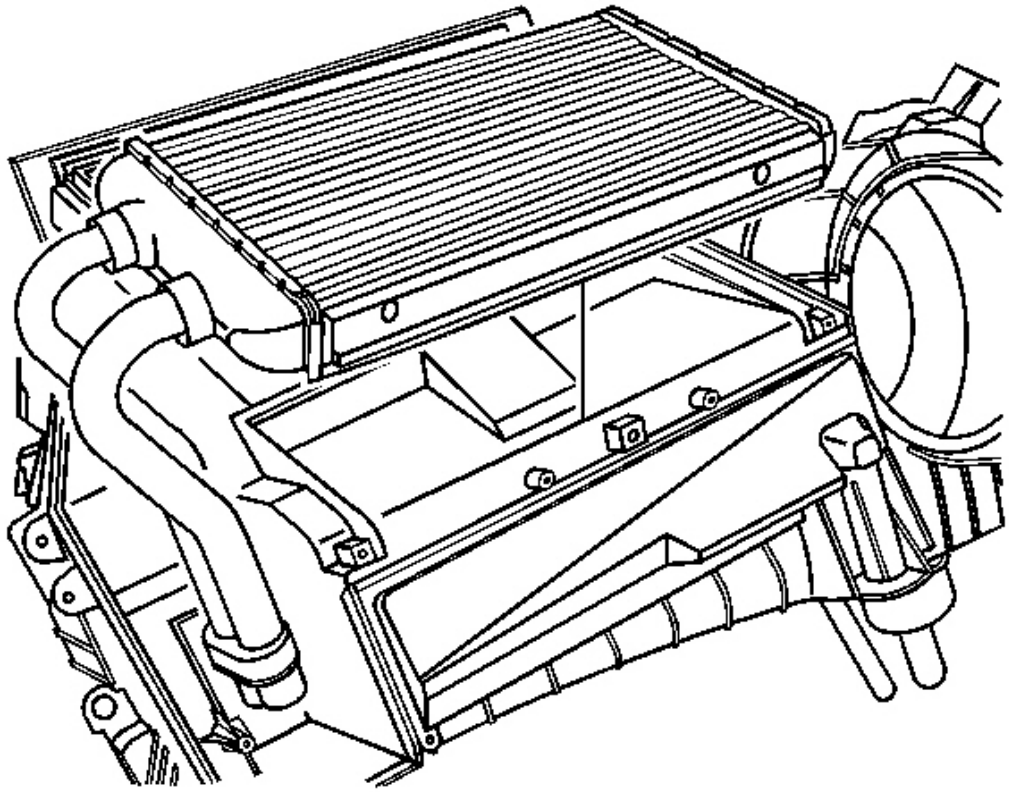

Fig. 237: Identifying Heater Core & HVAC Module
Courtesy of GENERAL MOTORS CORP.

15. Remove the heater core from the HVAC module.

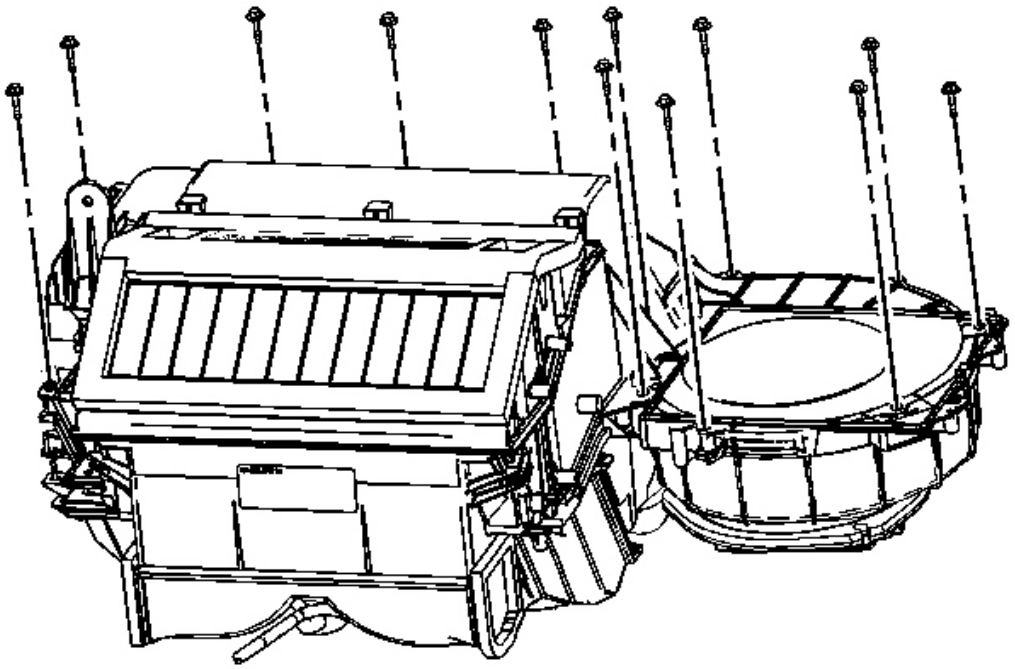

Fig. 238: Identifying HVAC Module Case Retaining Screws
Courtesy of GENERAL MOTORS CORP.

16. Remove the HVAC module case retaining screws.

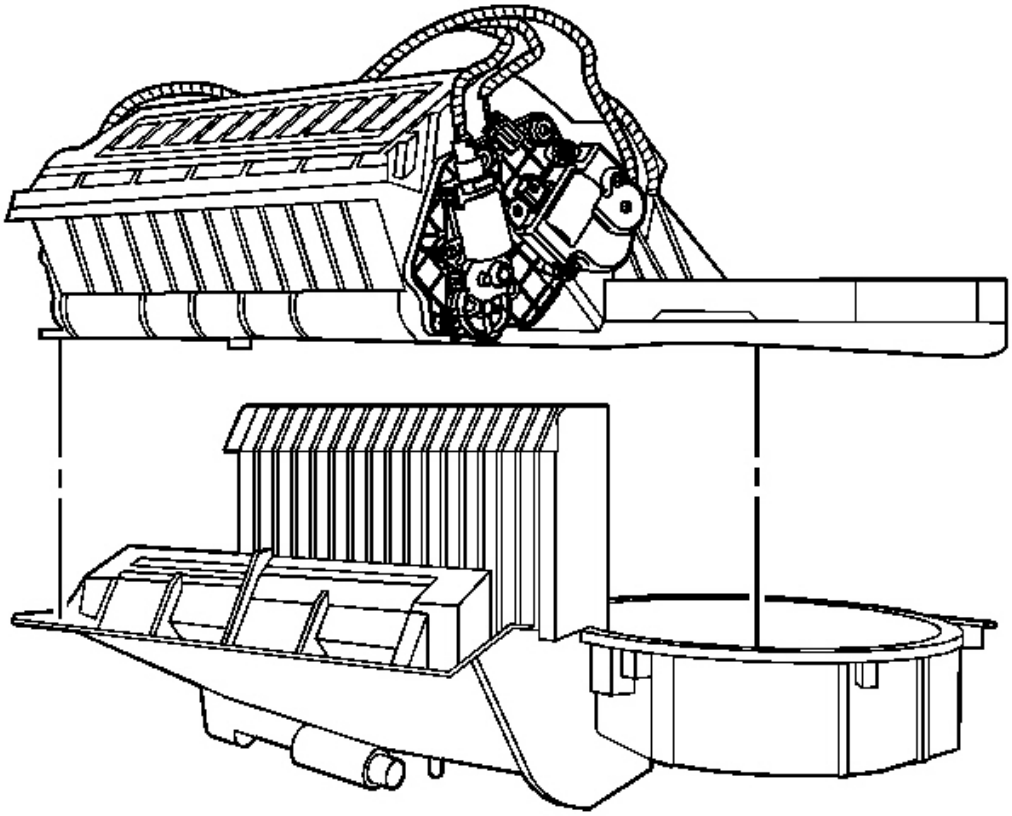

Fig. 239: HVAC Module Upper Case & HVAC Module Lower Case
Courtesy of GENERAL MOTORS CORP.

17. Separate the HVAC module upper case from the HVAC module lower case.

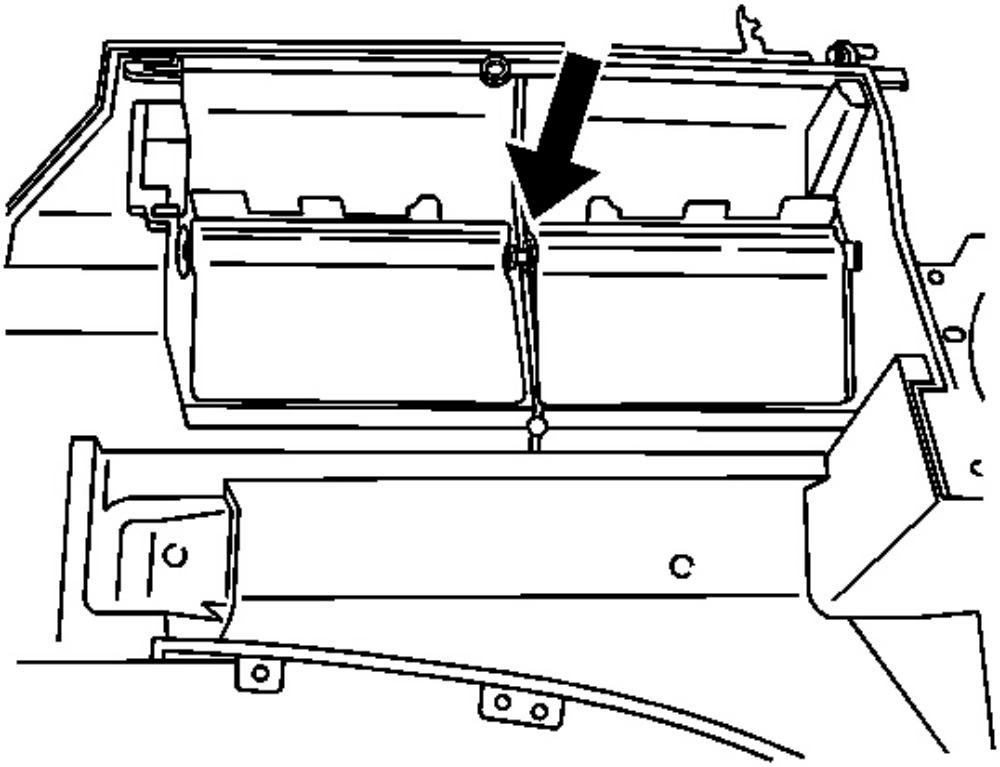

Fig. 240: Identifying LH & RH Air Temperature Doors
Courtesy of GENERAL MOTORS CORP.

18. Lift up on the LH and RH air temperature doors to disconnect from one another.

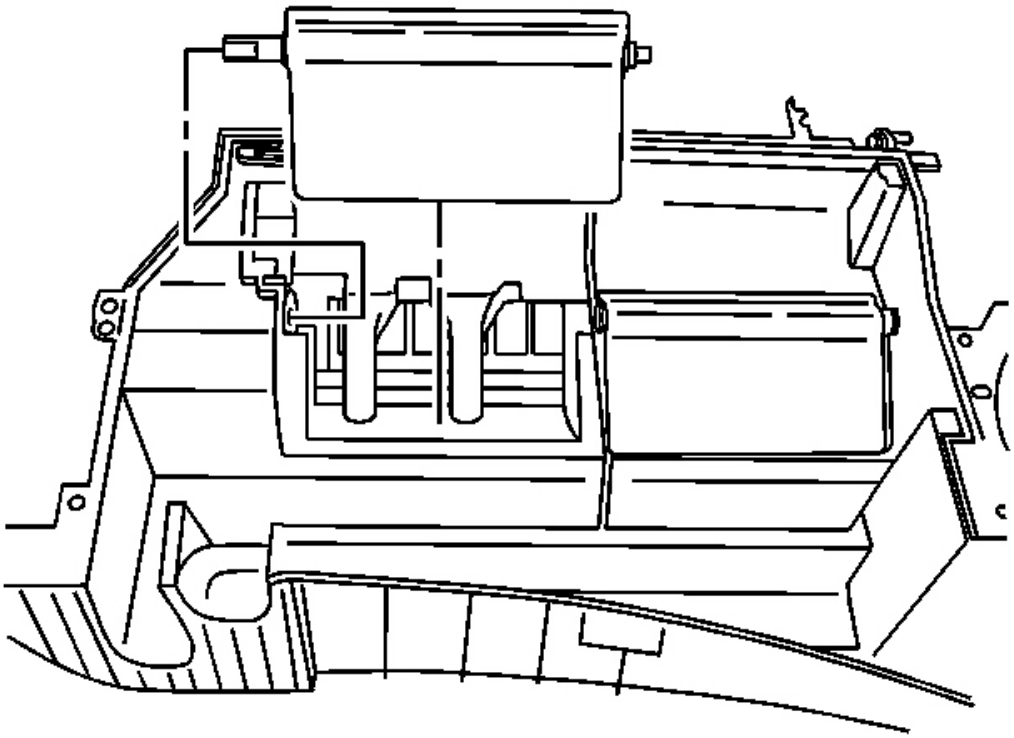

Fig. 241: Removing/Installing LH Air Temperature Door
Courtesy of GENERAL MOTORS CORP.

19. Remove the LH air temperature door from the HVAC module.

Installation Procedure

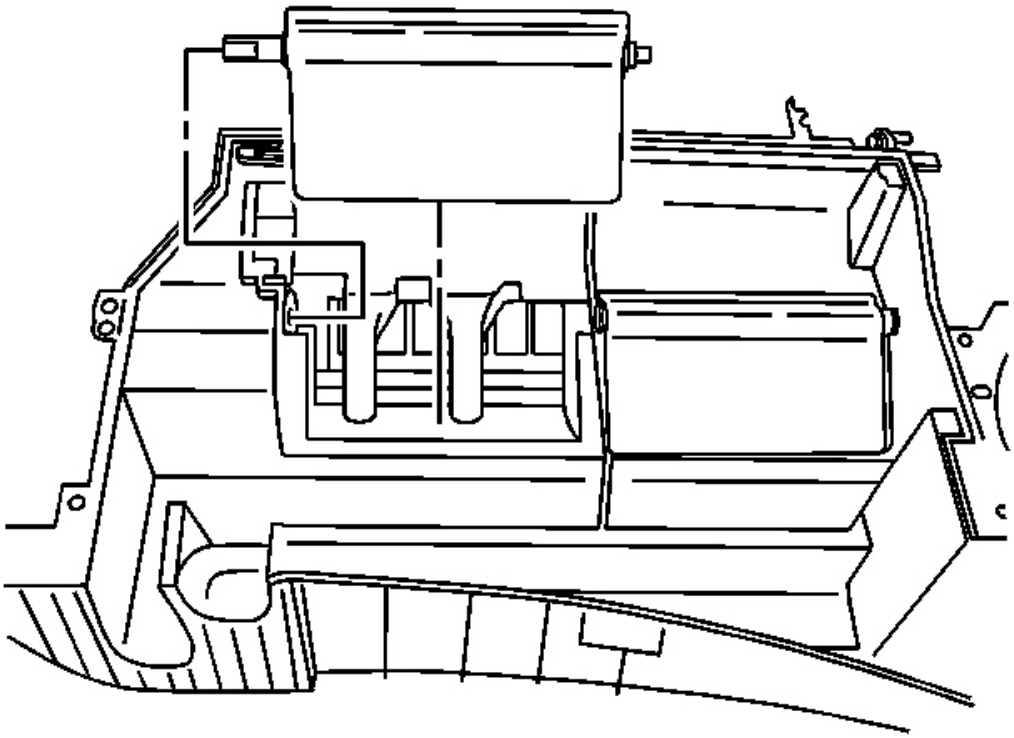

Fig. 242: Removing/Installing LH Air Temperature Door
Courtesy of GENERAL MOTORS CORP.

1. Install the LH air temperature door to the HVAC module.

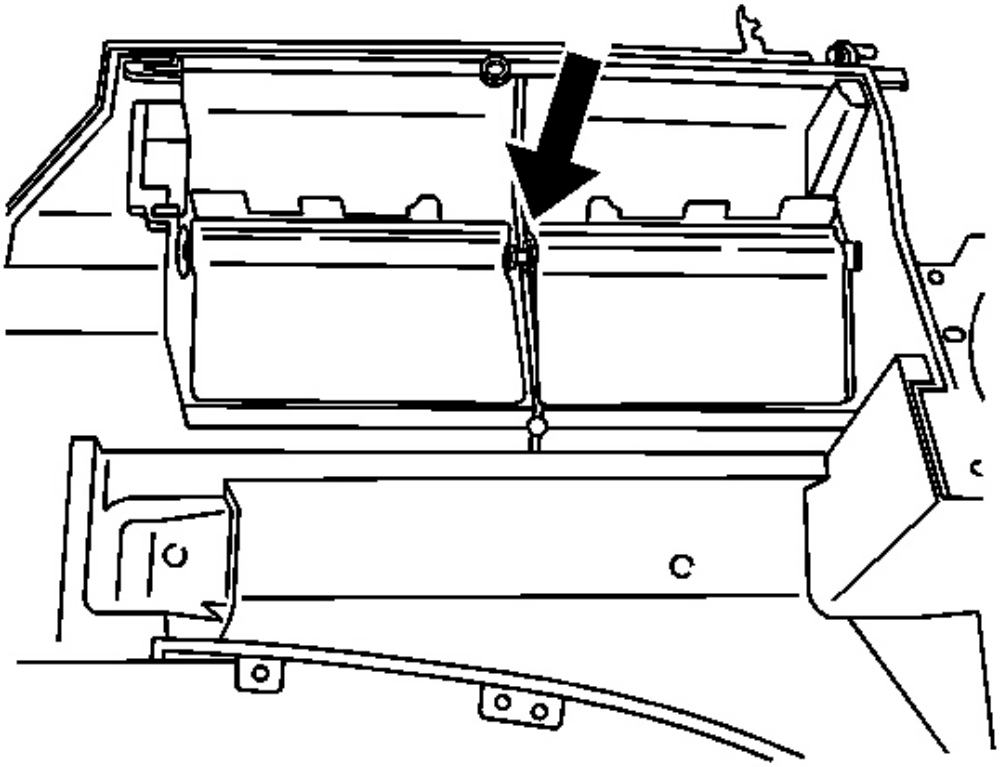

Fig. 243: Identifying LH & RH Air Temperature Doors
Courtesy of GENERAL MOTORS CORP.

2. Lift up on the LH and RH air temperature doors to connect to one another.

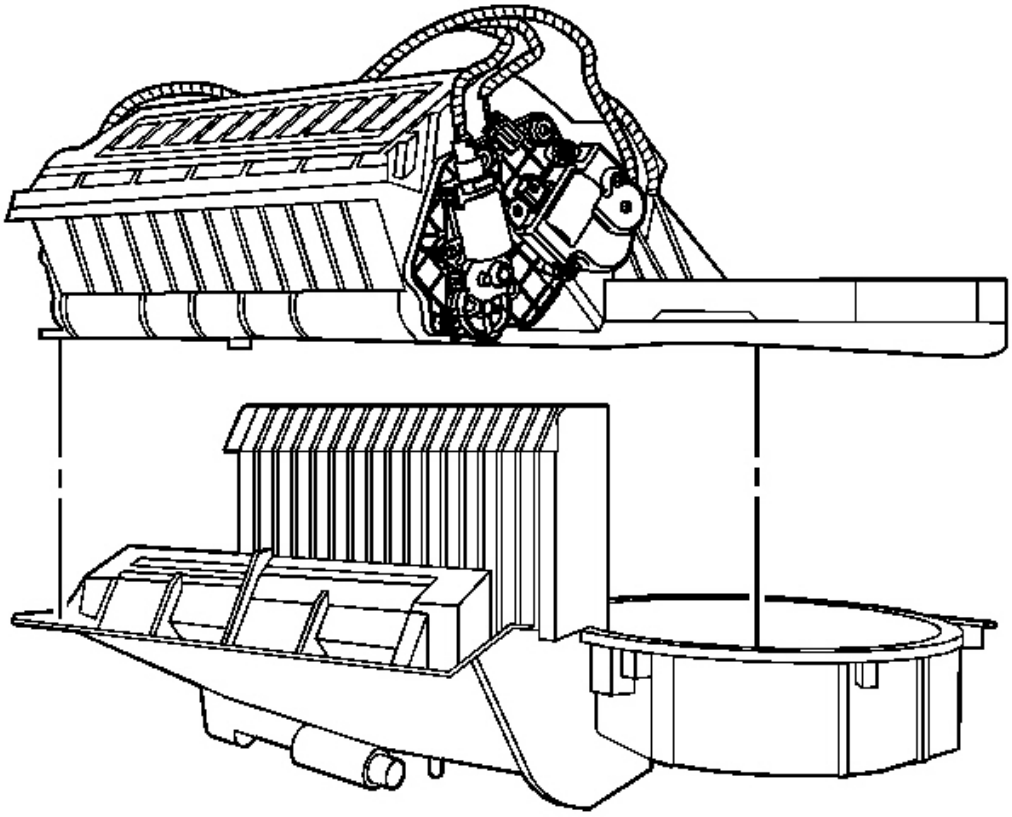

Fig. 244: HVAC Module Upper Case & HVAC Module Lower Case
Courtesy of GENERAL MOTORS CORP.

3. Install the HVAC module upper case to the HVAC module lower case.

NOTE: Refer to Fastener Notice in Cautions and Notices.

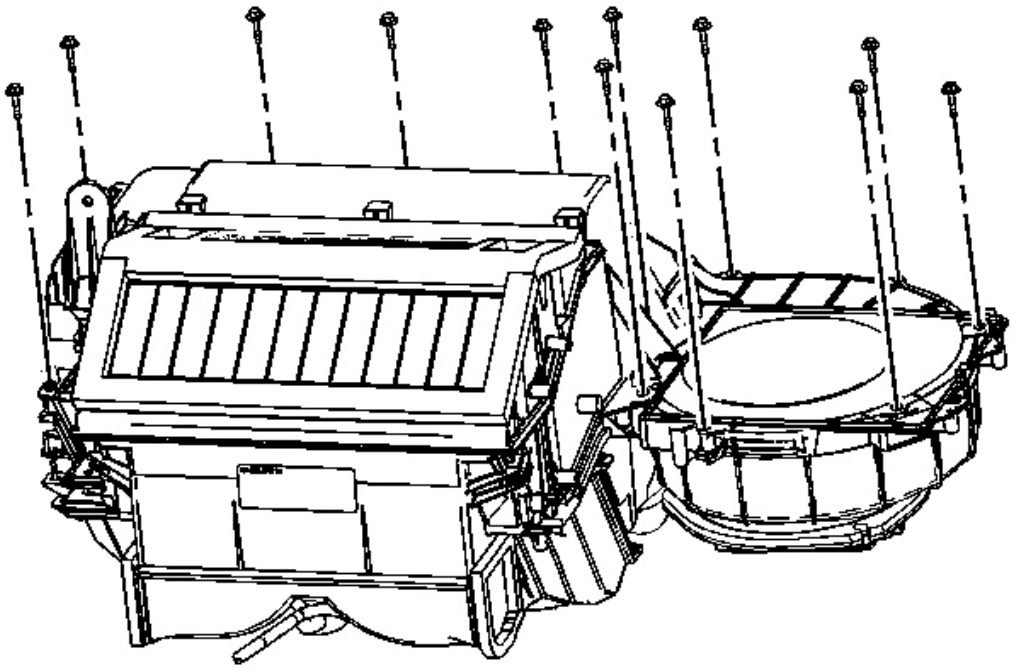

Fig. 245: Identifying HVAC Module Case Retaining Screws
Courtesy of GENERAL MOTORS CORP.

4. Install the HVAC module case retaining screws.

   Tighten: Tighten the screws to 1.6 N.m (14 lb in).

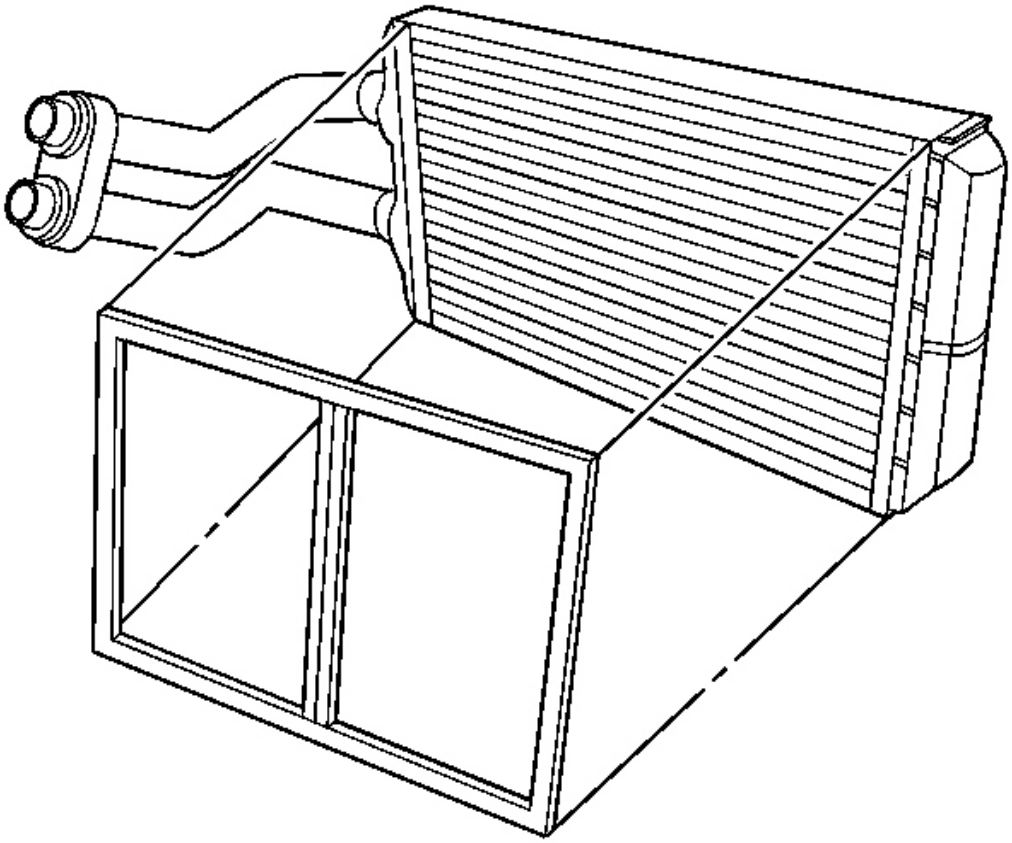

Fig. 246: Identifying Foam Sealer
Courtesy of GENERAL MOTORS CORP.

5. Install a new foam seal to the heater core.

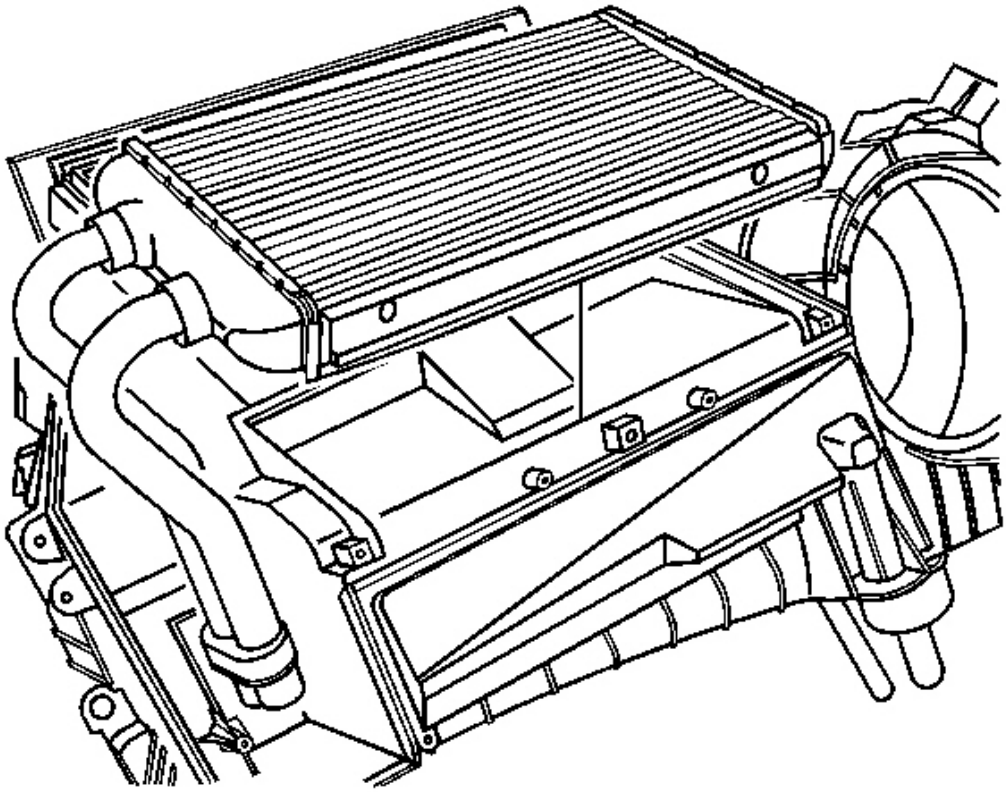

Fig. 247: Identifying Heater Core & HVAC Module
Courtesy of GENERAL MOTORS CORP.

6. Install the heater core to the HVAC module.
7. Install the heater cover to the HVAC module.

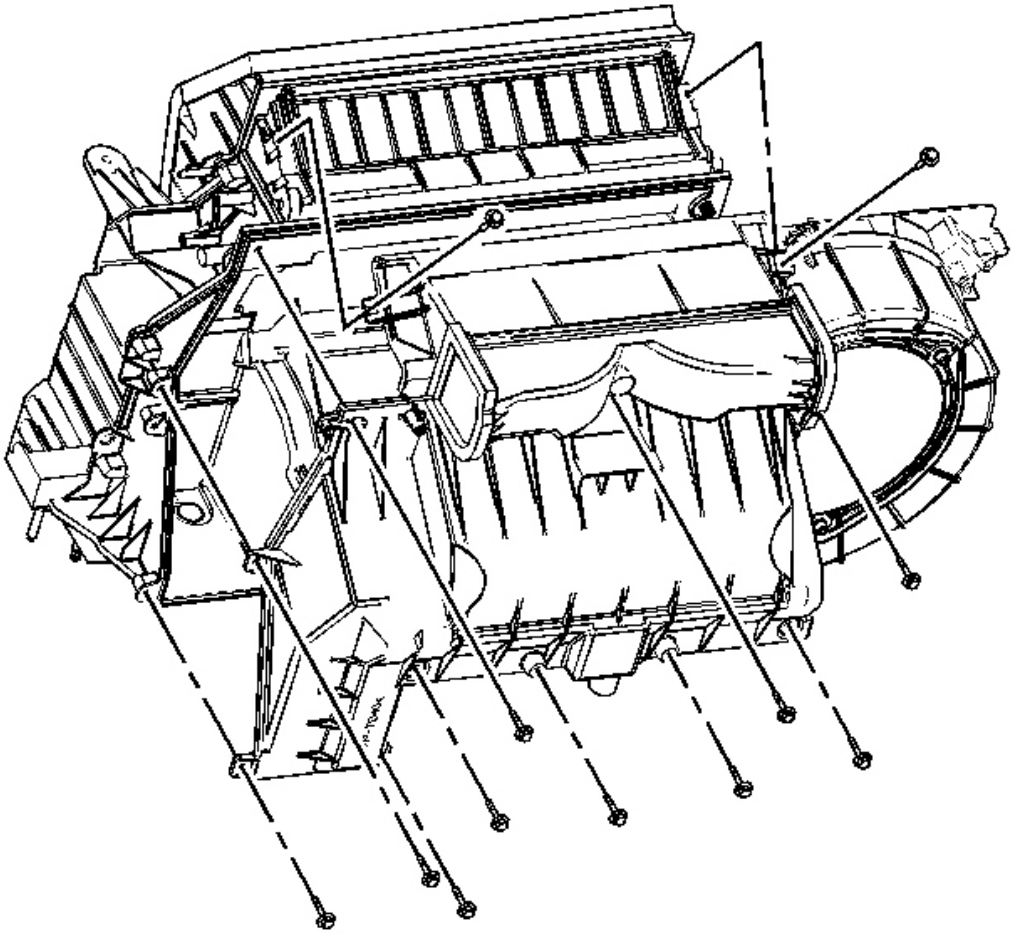

Fig. 248: Identifying Heater Cover Screws
Courtesy of GENERAL MOTORS CORP.

8. Install the heater cover screws.

   Tighten: Tighten the screws to 1.6 N.m (14 lb in).

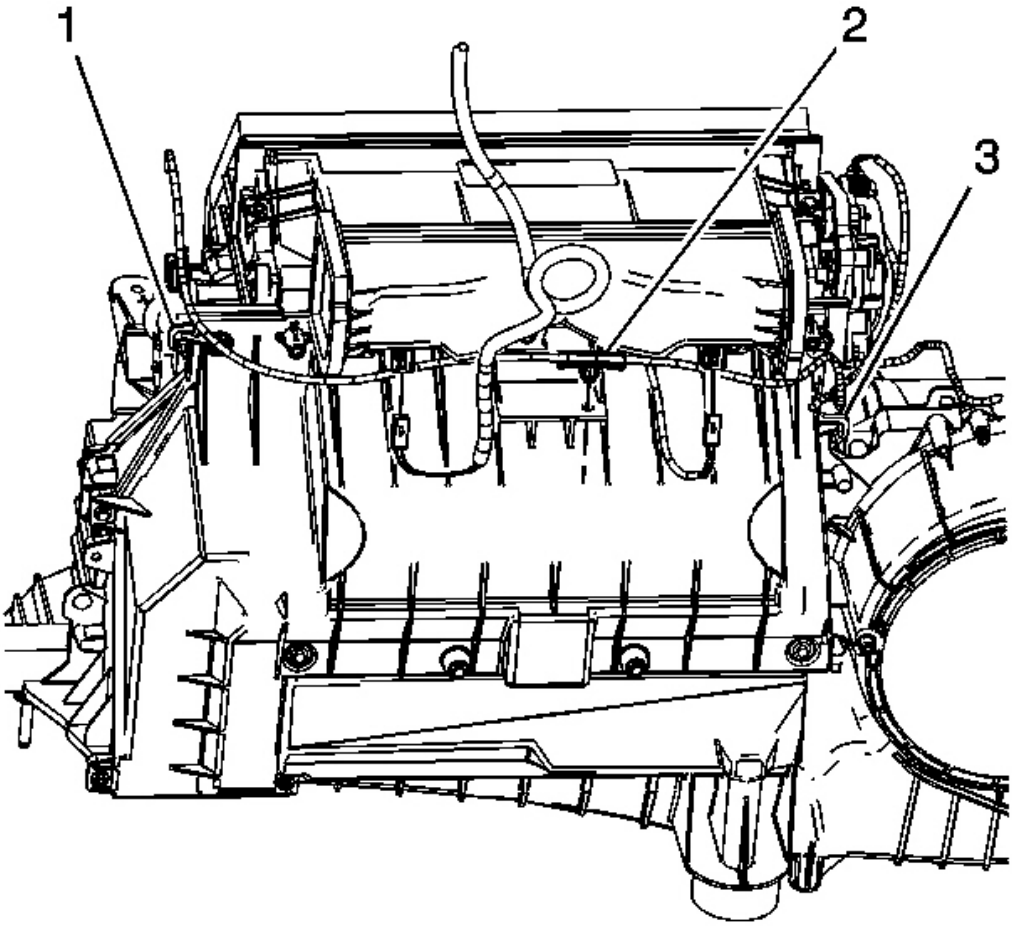

Fig. 249: Identifying Heater Core Cover Wire Harness Retainer & HVAC Module Wiring Harness Retainer Pin
Courtesy of GENERAL MOTORS CORP.

9. Reposition the HVAC wiring harness and connect the wiring harness to the heater core cover wiring harness retainer (1).
10. Reposition the HVAC wiring harness and connect the wiring harness to the heater core cover wiring harness retainer (3).
11. Connect the HVAC module wiring harness retainer pin (2) to the HVAC module.
12. Connect the discharge temperature management (DTM) sensor electrical connectors.
13. Install the RH air temperature actuator.

14. Install the RH air temperature actuator screws.

    Tighten: Tighten the screws to 1.6 N.m (14 lb in).

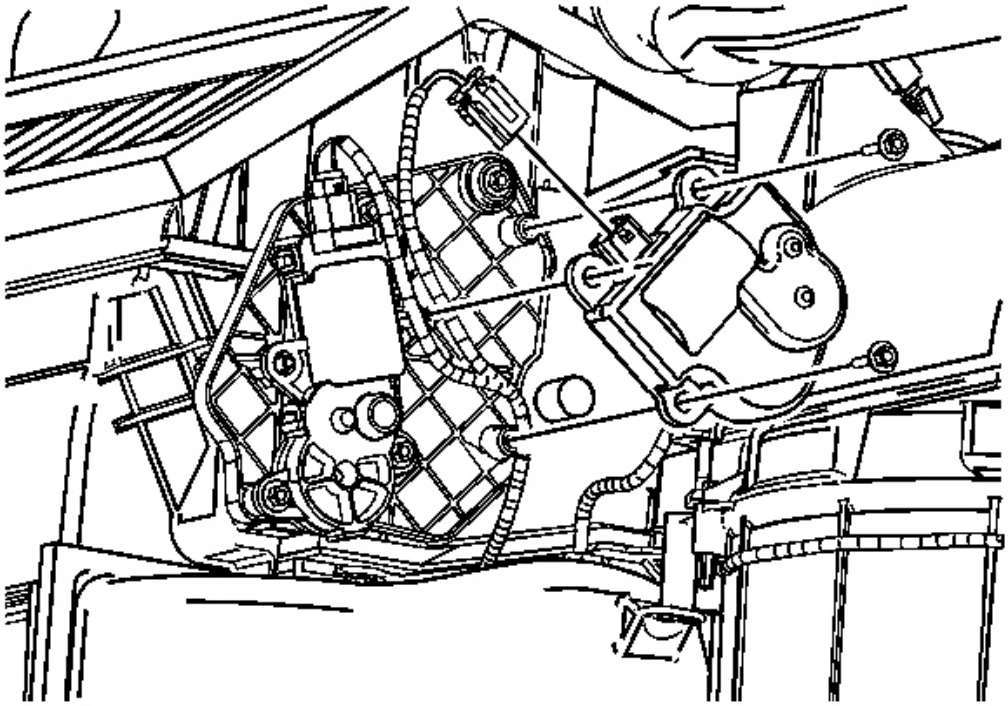

Fig. 250: View Of RH Air Temperature Actuator
Courtesy of GENERAL MOTORS CORP.

15. Connect the RH air temperature actuator electrical connector.
16. Install the LH air temperature actuator.
17. Install the LH air temperature actuator screws.

    Tighten: Tighten the screws to 1.6 N.m (14 lb in).

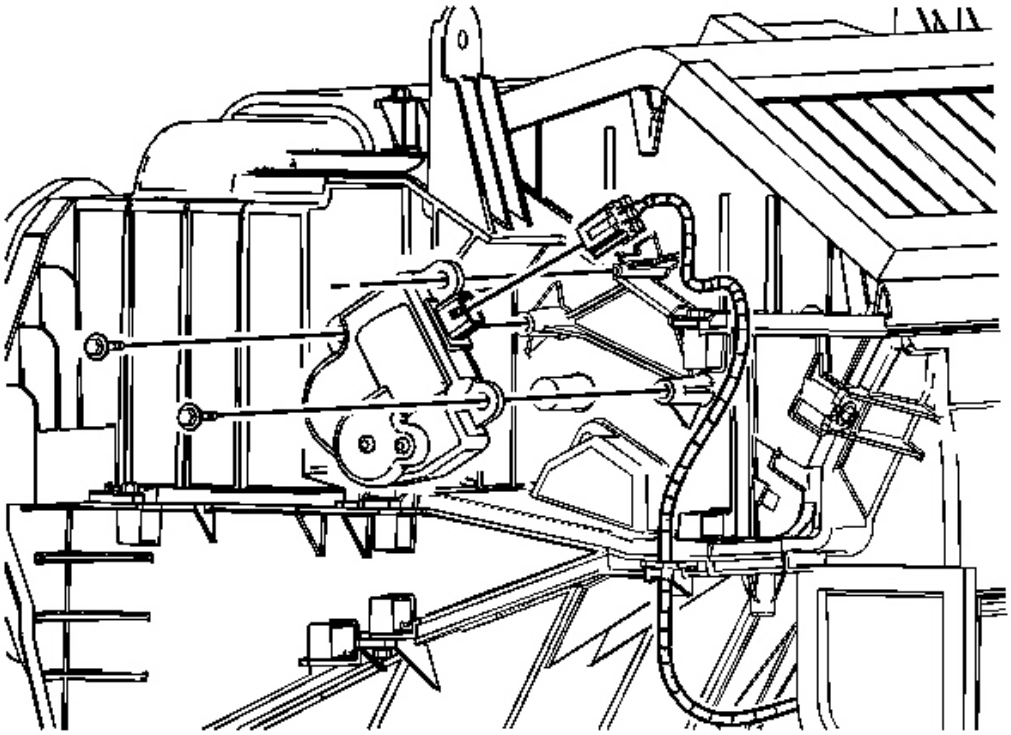

Fig. 251: Identifying LH Air Temperature Actuator & Components
Courtesy of GENERAL MOTORS CORP.

18. Connect the LH air temperature actuator electrical connector.
19. Install the HVAC module. Refer to **HVAC Module Assembly Replacement**.

MODE VALVE ASSEMBLY REPLACEMENT

Removal Procedure

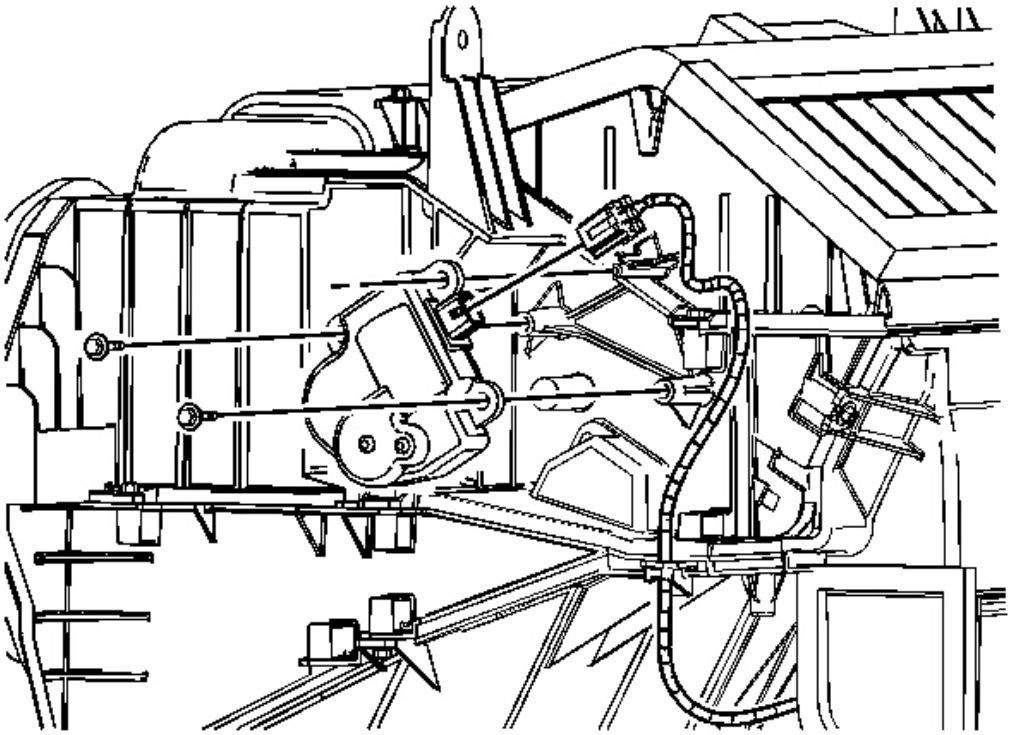

Fig. 252: Identifying LH Air Temperature Actuator & Components
Courtesy of GENERAL MOTORS CORP.

1. Remove the HVAC module. Refer to **HVAC Module Assembly Replacement**.
2. Disconnect the LH air temperature actuator electrical connector.
3. Remove the LH actuator retaining screws.
4. Remove the LH actuator.

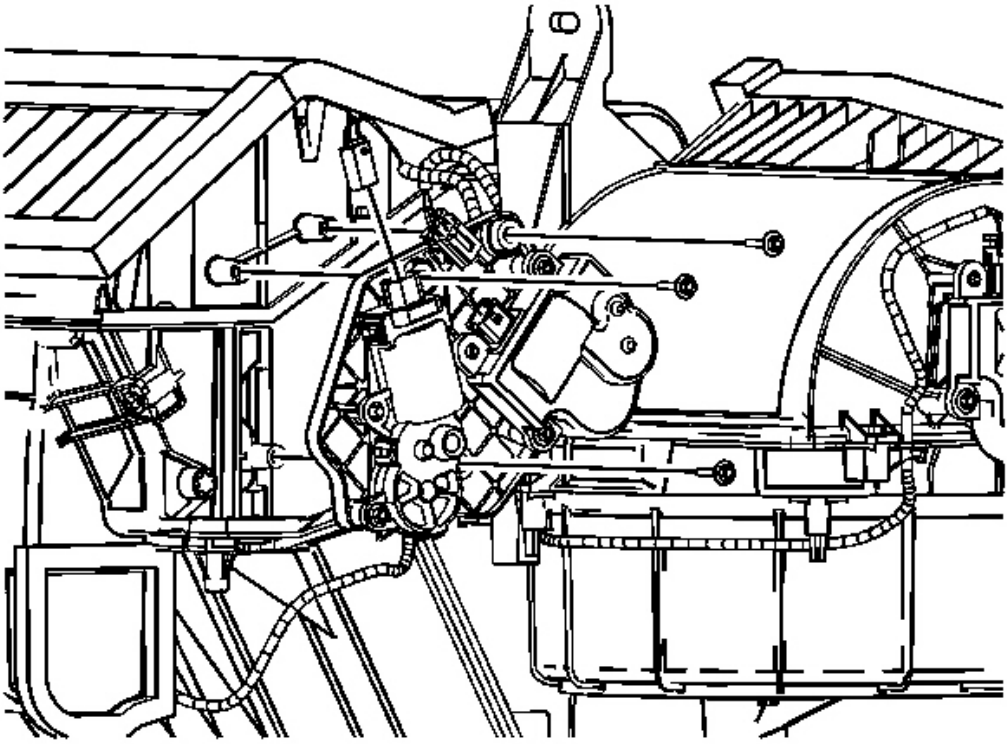

Fig. 253: Mode Actuator Electrical Connector & Components
Courtesy of GENERAL MOTORS CORP.

5. Disconnect the mode actuator electrical connector.
6. Disconnect the RH air temperature actuator electrical connector.
7. Remove the actuator support bracket retaining screws.
8. Remove the actuator support bracket and actuators.

NOTE: Do not remove the TORX screws from the mode valve assembly. Misalignment can cause damage to the film valve.

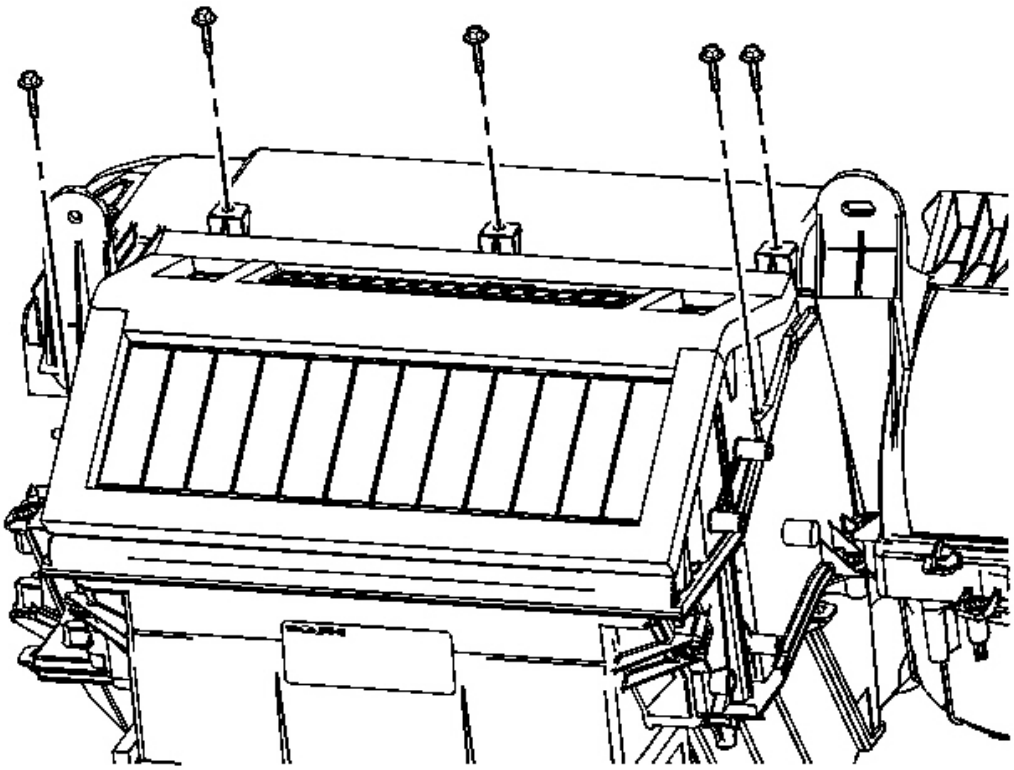

Fig. 254: Identifying Mode Valve Assembly Retaining Screws
Courtesy of GENERAL MOTORS CORP.

9. Remove the mode valve assembly retaining screws.

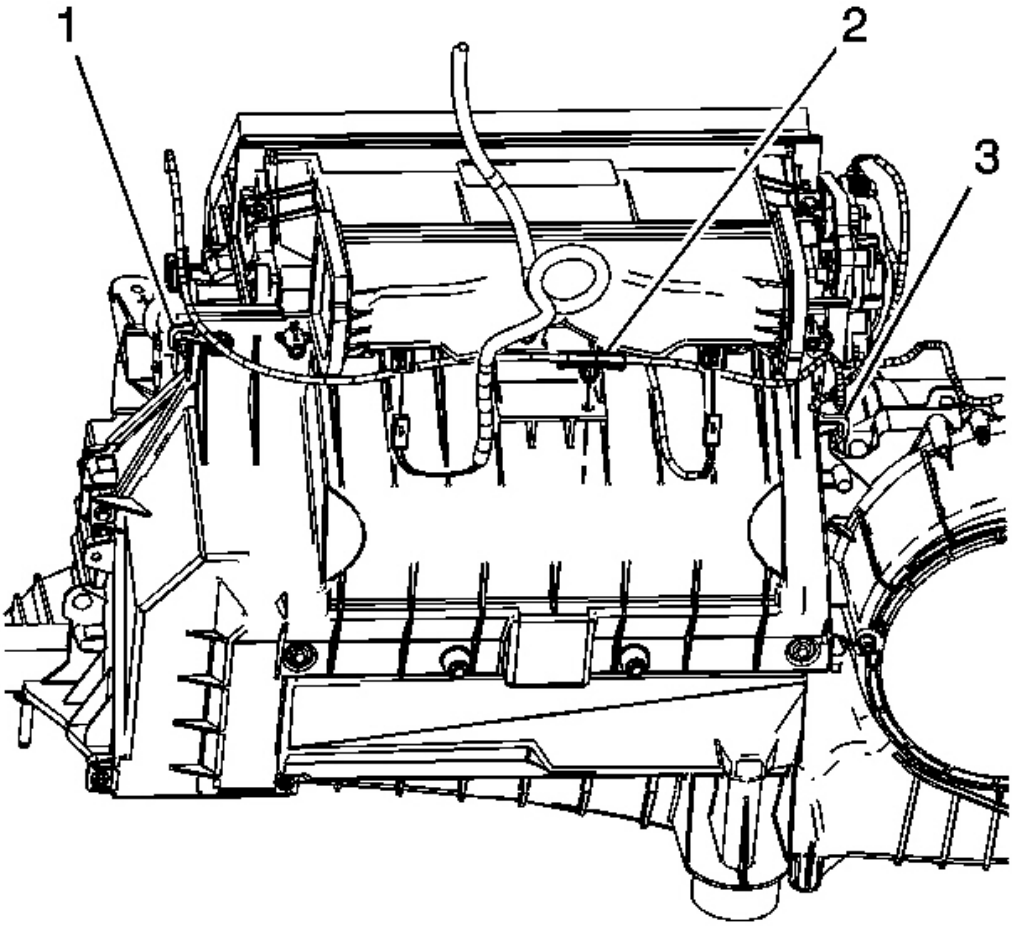

Fig. 255: Identifying Heater Core Cover Wire Harness Retainer & HVAC Module Wiring Harness Retainer Pin
Courtesy of GENERAL MOTORS CORP.

10. Disconnect the HVAC module wiring harness retainer pin (1) from the HVAC module.
11. Disconnect the wiring harness from the heater core cover wire harness retainer (2) and reposition the wiring harness aside.
12. Disconnect the discharge temperature management (DTM) sensor electrical connectors.

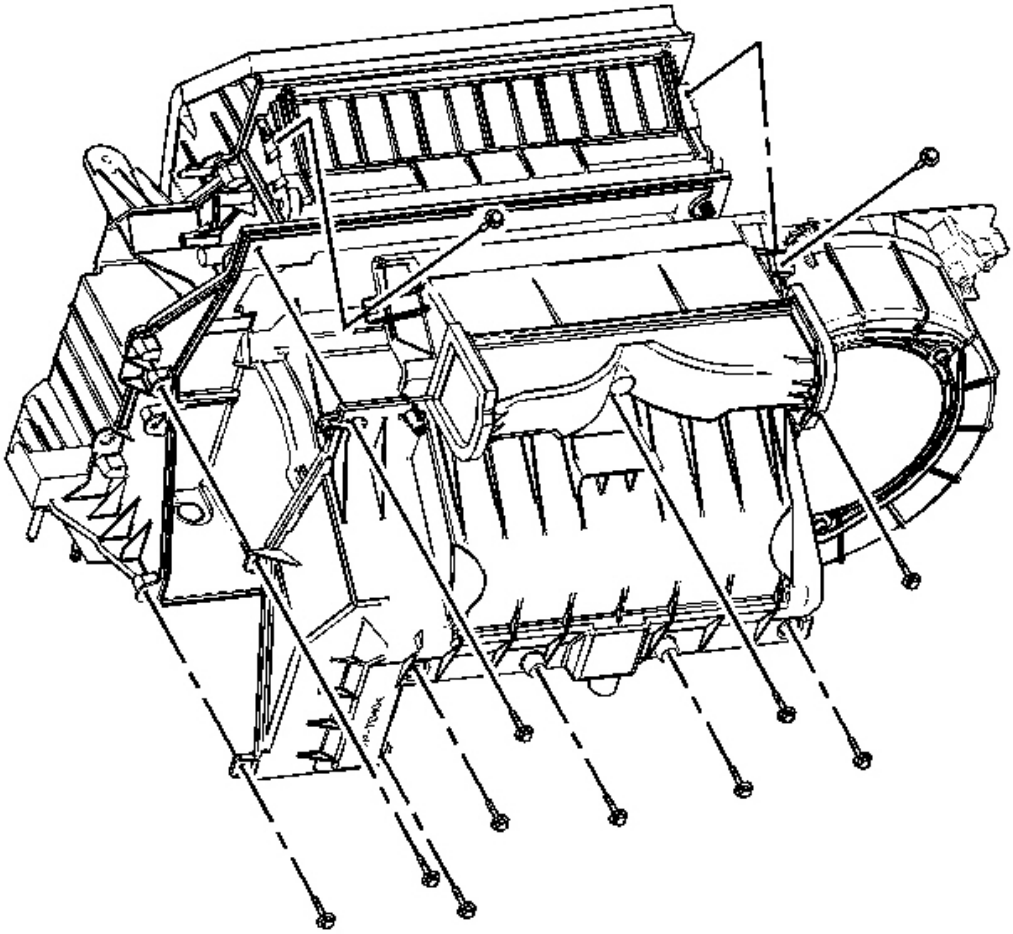

Fig. 256: Identifying Heater Cover Screws
Courtesy of GENERAL MOTORS CORP.

13. Remove the heater core cover screws.
14. Remove the heater core cover.

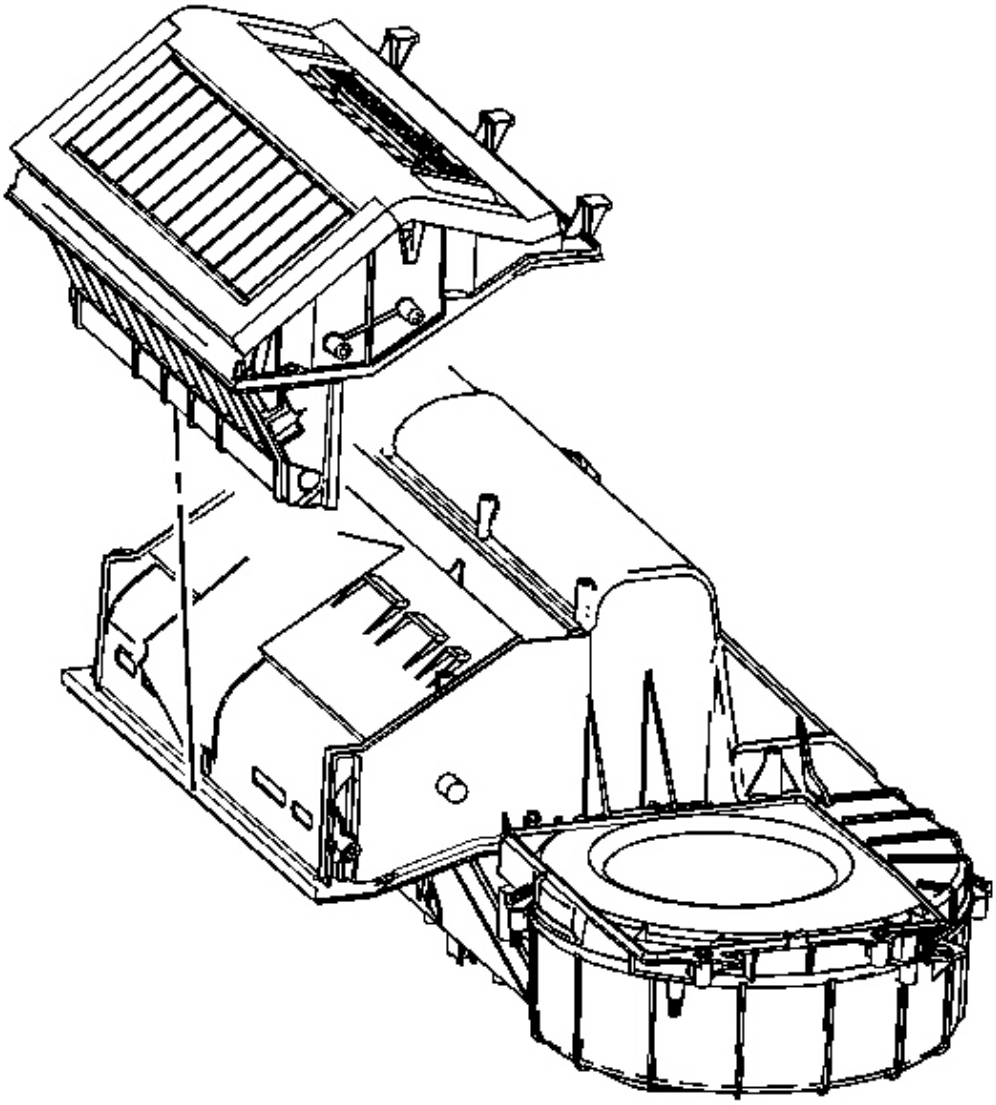

Fig. 257: Identifying Mode Valve Assembly
Courtesy of GENERAL MOTORS CORP.

15. Remove the mode valve assembly.

Installation Procedure

NOTE: **Do not tamper, adjust or disassemble the mode valve assembly. The proper setting of the pretensions on the springs is critical to the film valve function.**

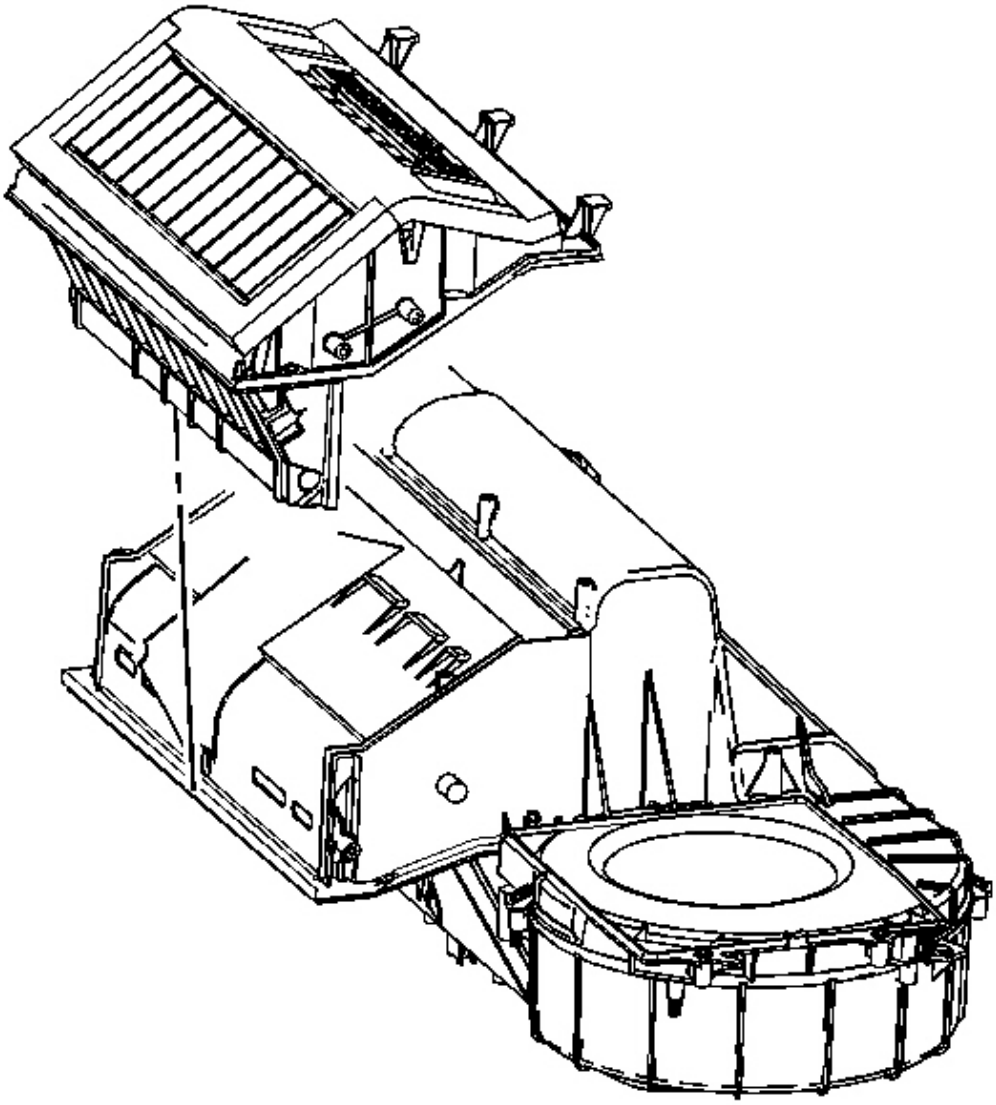

Fig. 258: Identifying Mode Valve Assembly
Courtesy of GENERAL MOTORS CORP.

1. Install the mode valve assembly.
2. Install the heater core cover.

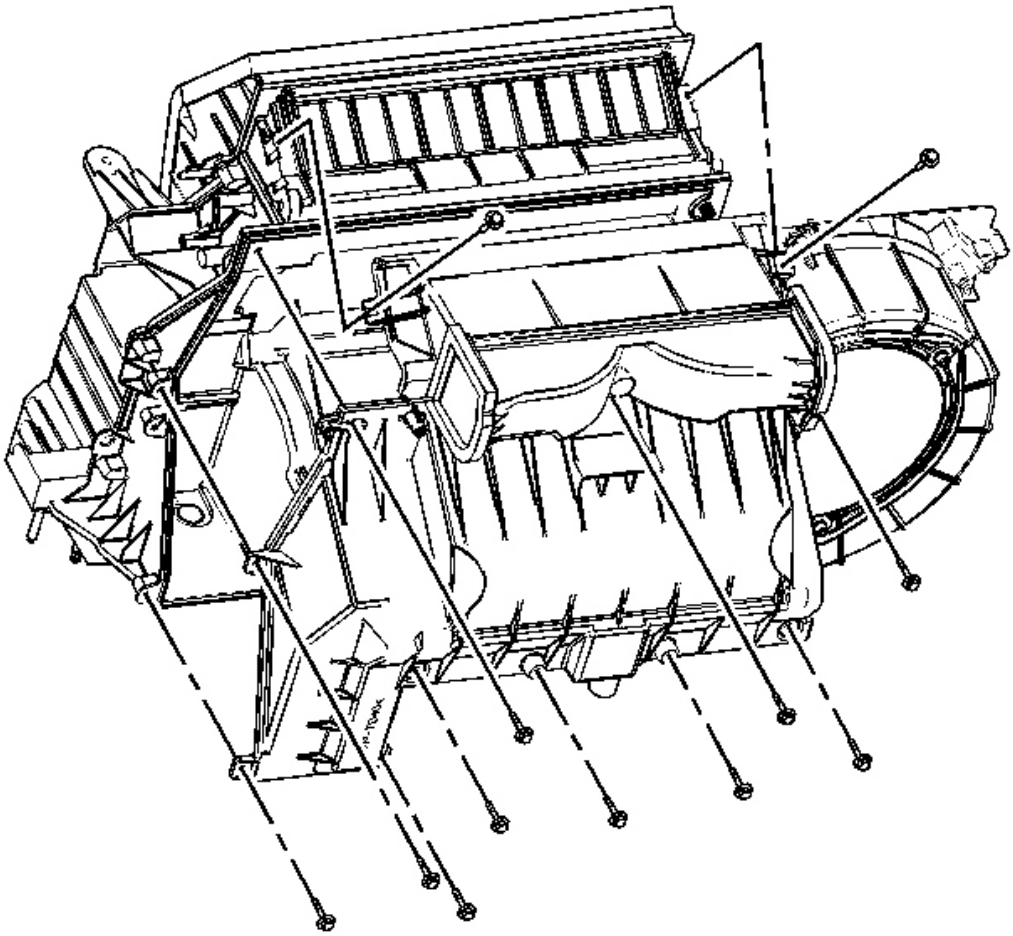

Fig. 259: Identifying Heater Cover Screws
Courtesy of GENERAL MOTORS CORP.

NOTE: Refer to Fastener Notice in Cautions and Notices.

3. Install the heater core cover screws.

Tighten: Tighten the screws to 1.6 N.m (14 lb in).

4. Connect the wiring harness to the heater core cover wire harness retainer (2).

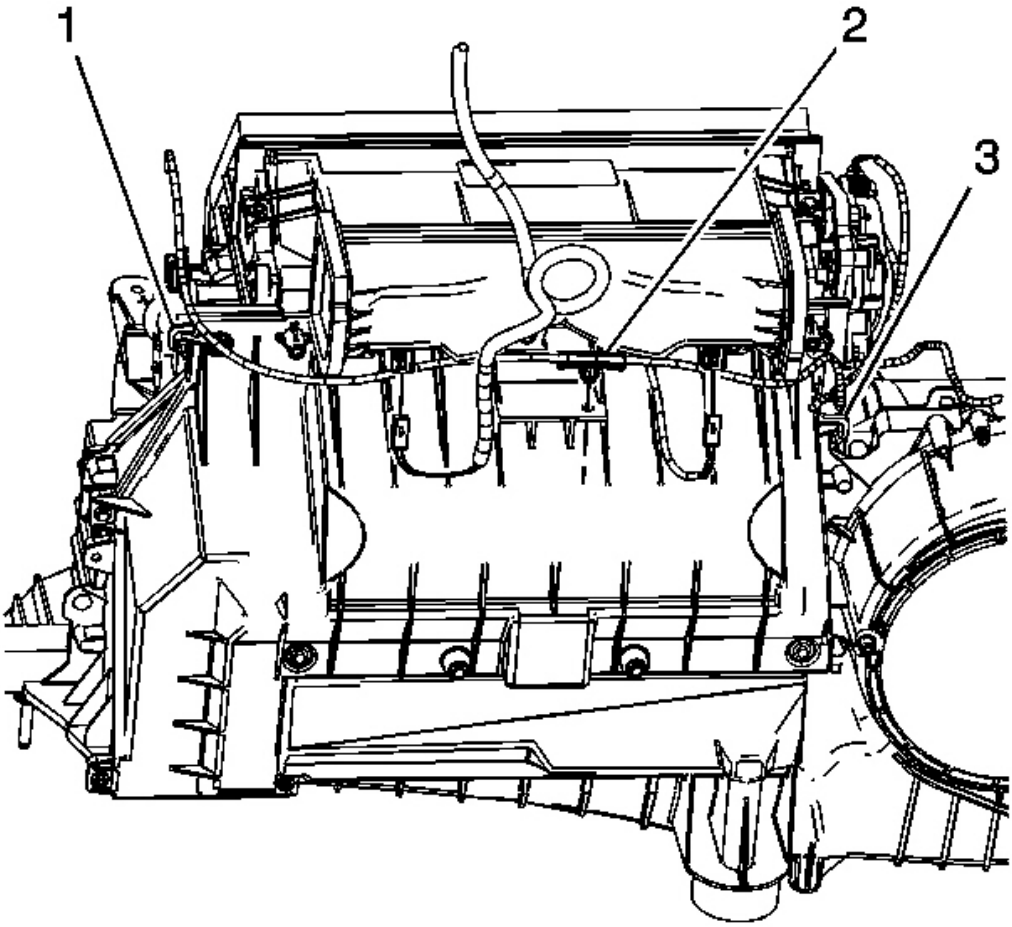

Fig. 260: Identifying Heater Core Cover Wire Harness Retainer & HVAC Module Wiring Harness Retainer Pin
Courtesy of GENERAL MOTORS CORP.

5. Connect the HVAC module wiring harness retainer pin (1) to the HVAC module.
6. Connect the discharge temperature management (DTM) sensor electrical connectors.

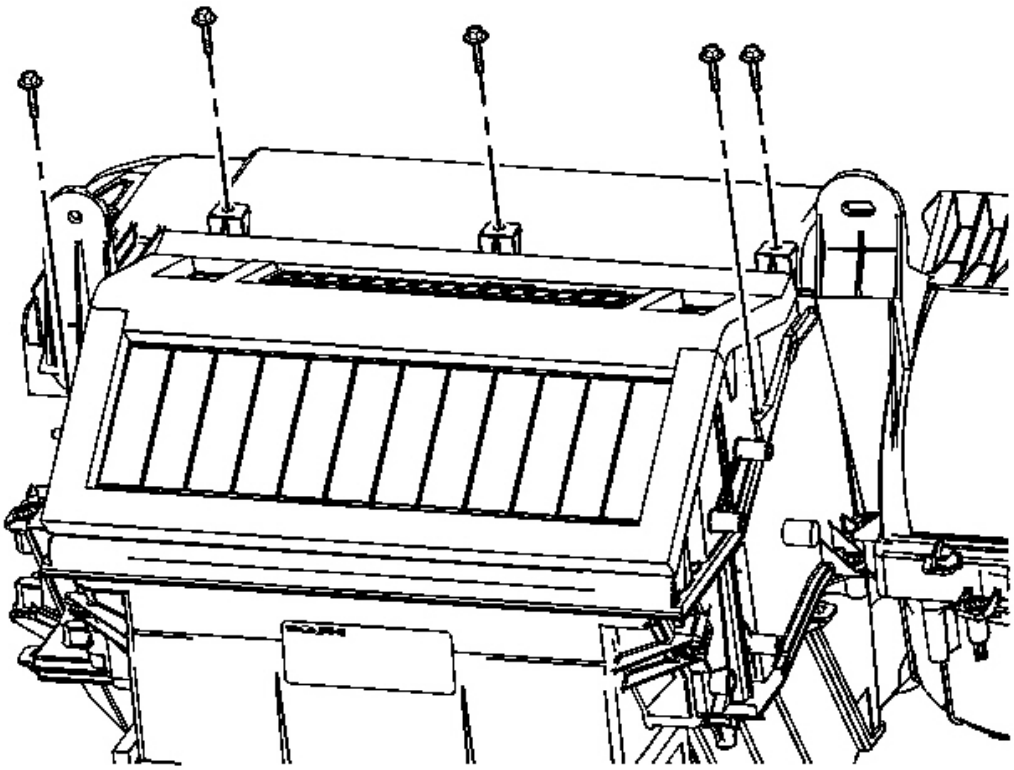

Fig. 261: Identifying Mode Valve Assembly Retaining Screws
Courtesy of GENERAL MOTORS CORP.

7. Install the mode valve assembly retaining screws.

   Tighten: Tighten the screws to 1.6 N.m (14 lb in).

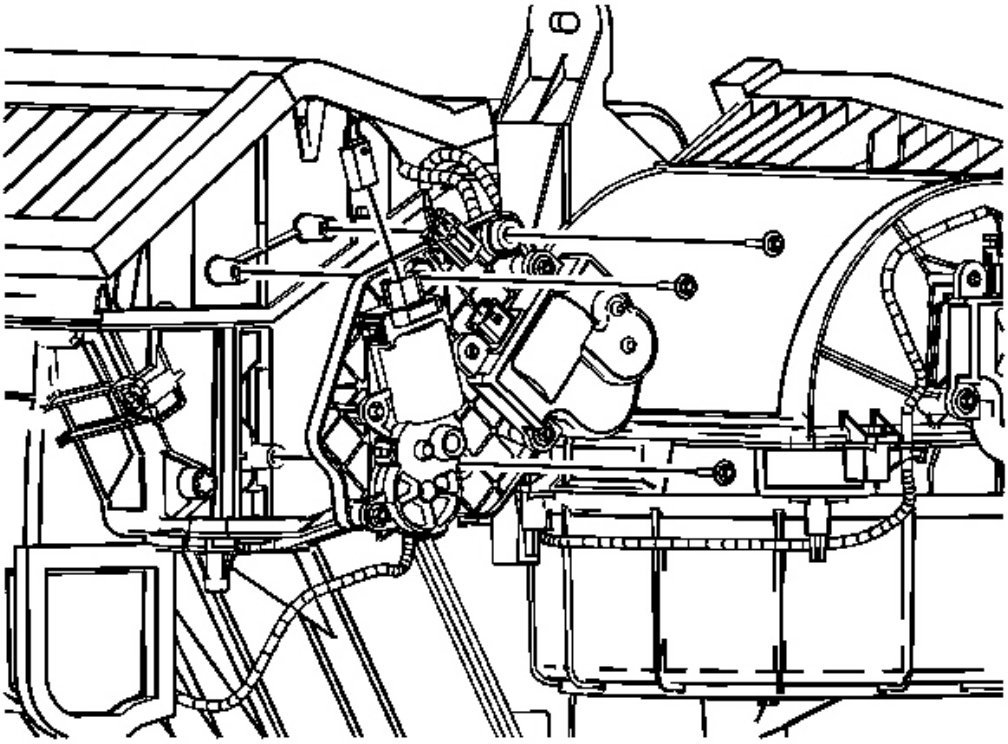

Fig. 262: Mode Actuator Electrical Connector & Components
Courtesy of GENERAL MOTORS CORP.

IMPORTANT: It may be necessary to gently rotate the RH temperature door to align the actuator support bracket and actuators.

8. Install the actuator support bracket and actuators to the HVAC module.
9. Install the actuator support bracket retaining screws.

   Tighten: Tighten the screws to 1.6 N.m (14 lb in).

10. Connect the RH air temperature actuator electrical connector.
11. Connect the mode actuator electrical connector.
12. Install the LH actuator.
13. Install the LH actuator retaining screws.

14. Connect the LH air temperature actuator electrical connector.

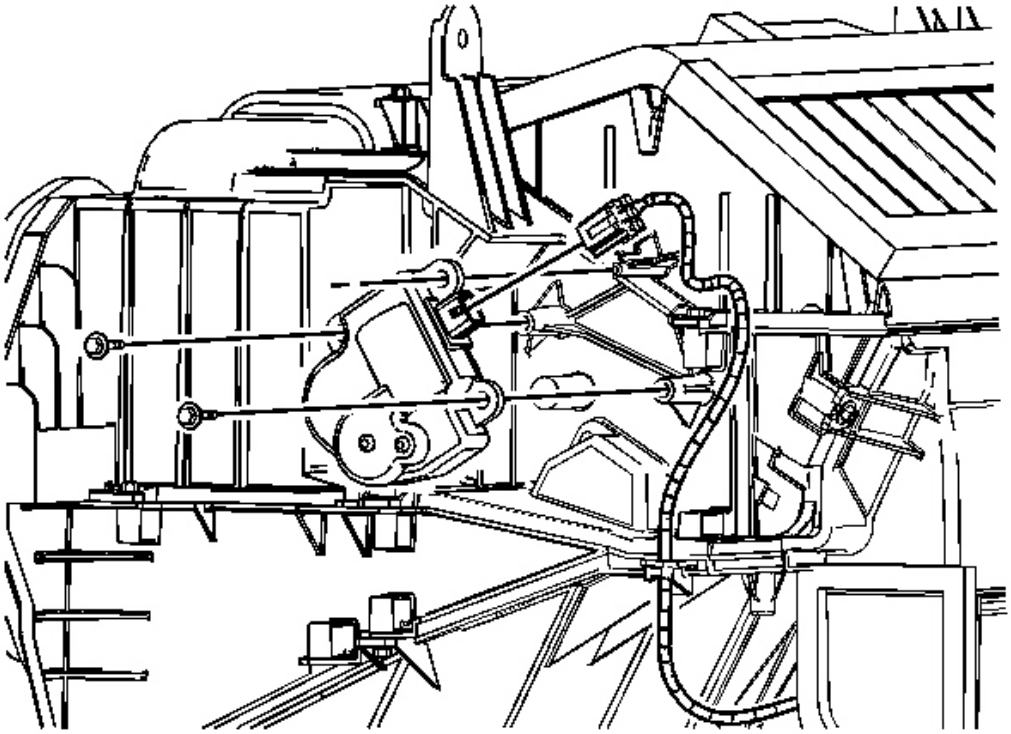

Fig. 263: Identifying LH Air Temperature Actuator & Components
Courtesy of GENERAL MOTORS CORP.

15. Install the HVAC module. Refer to **HVAC Module Assembly Replacement**.

RECIRCULATION DOOR REPLACEMENT

Removal Procedure

1. Remove the air inlet assembly. Refer to **Air Inlet Assembly Replacement**.

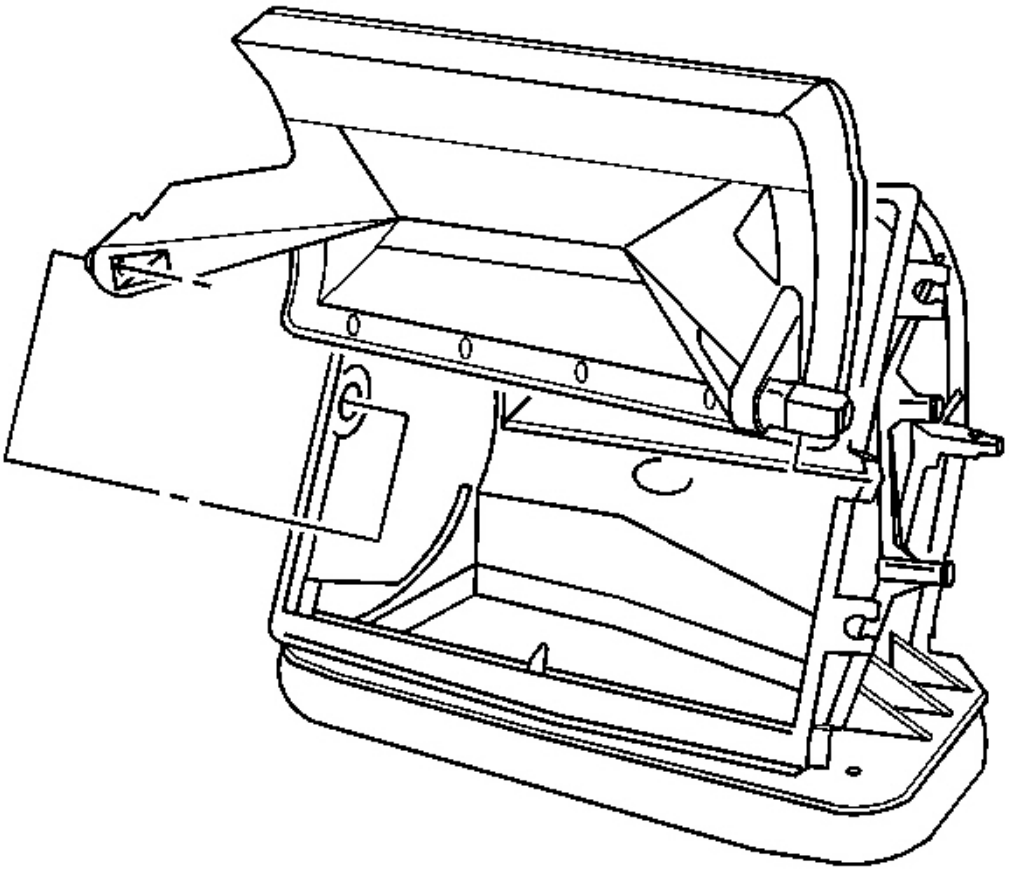

Fig. 264: Identifying Air Inlet Door & Recirculation Housing
Courtesy of GENERAL MOTORS CORP.

2. Disconnect and remove the recirculation door from the air inlet housing.

Installation Procedure

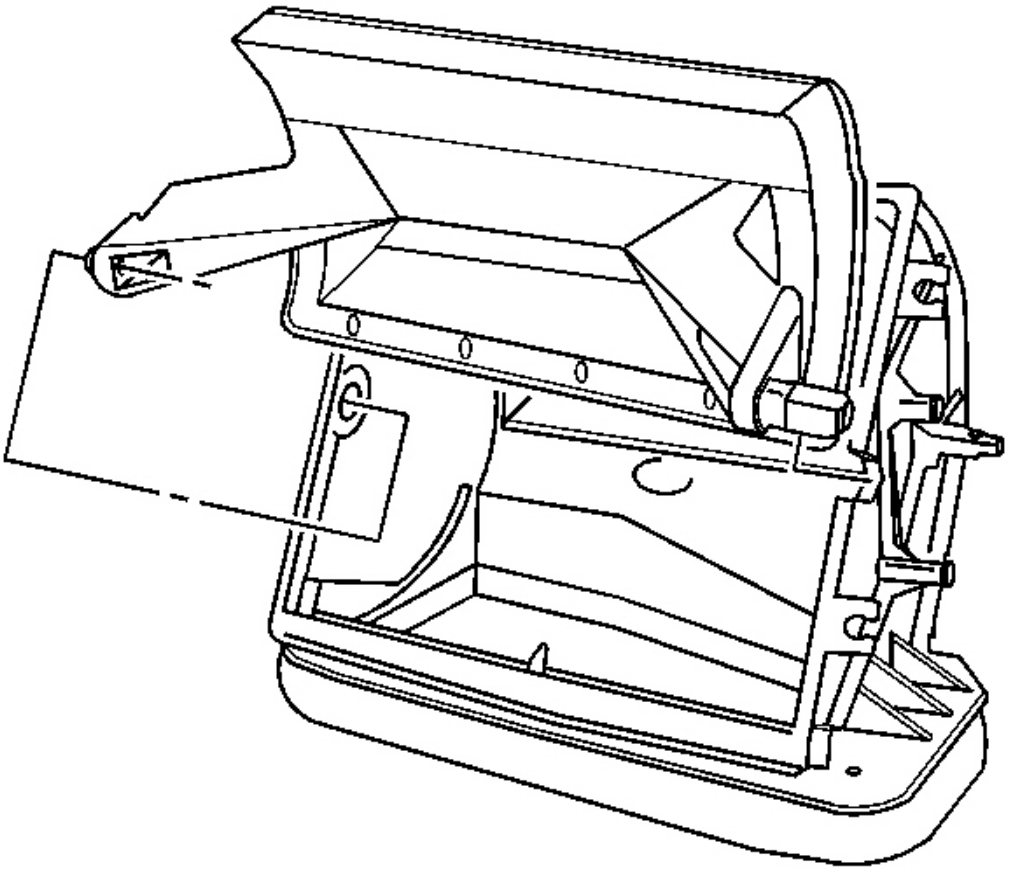

Fig. 265: Identifying Air Inlet Door & Recirculation Housing
Courtesy of GENERAL MOTORS CORP.

1. Install the recirculation door to the air inlet housing.
2. Install the air inlet assembly. Refer to **Air Inlet Assembly Replacement**.

HEATER CORE COVER REPLACEMENT

Removal Procedure

1. Remove the HVAC module. Refer to **HVAC Module Assembly Replacement**.

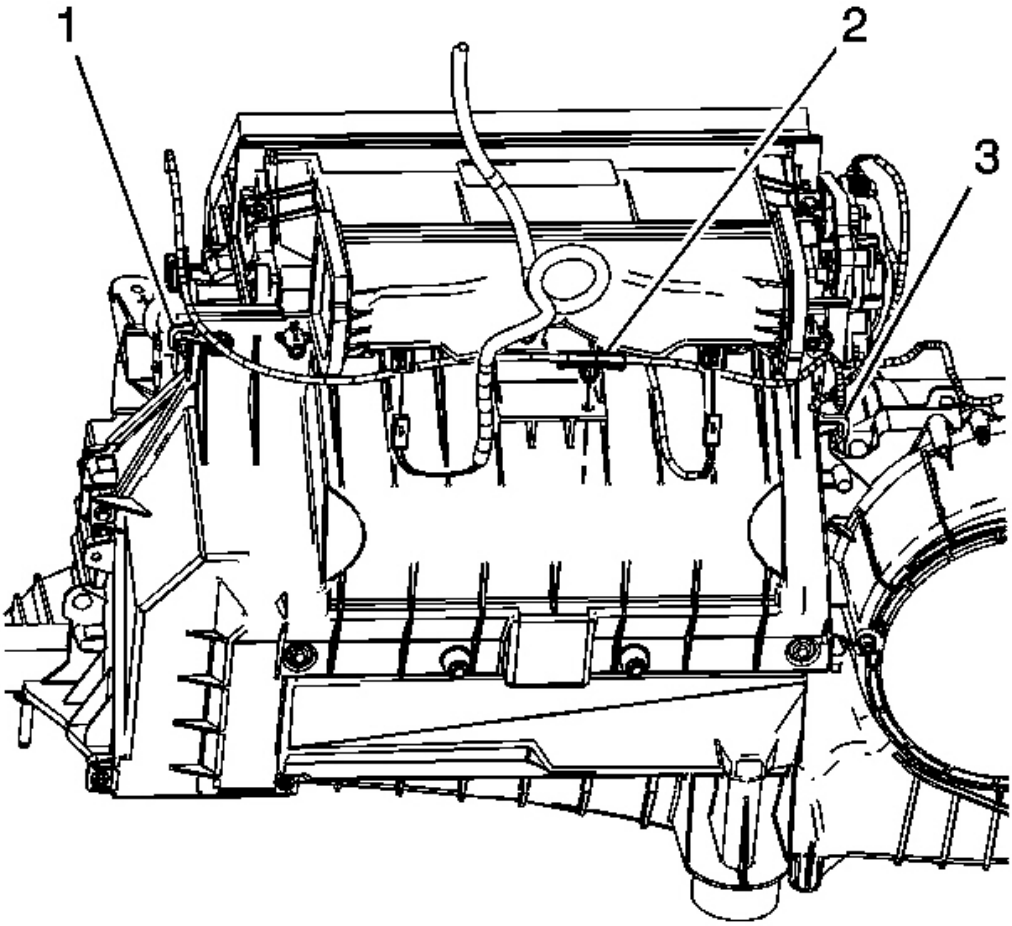

Fig. 266: Identifying Heater Core Cover Wire Harness Retainer & HVAC Module Wiring Harness Retainer Pin
Courtesy of GENERAL MOTORS CORP.

2. Disconnect the HVAC module wiring harness retainer pin (2) from the HVAC module.
3. Disconnect the wiring harness from the heater core cover wire harness retainer (1) and reposition the wiring harness aside.
4. Disconnect the wiring harness from the heater core cover wire harness retainer (3) and reposition the wiring harness aside.

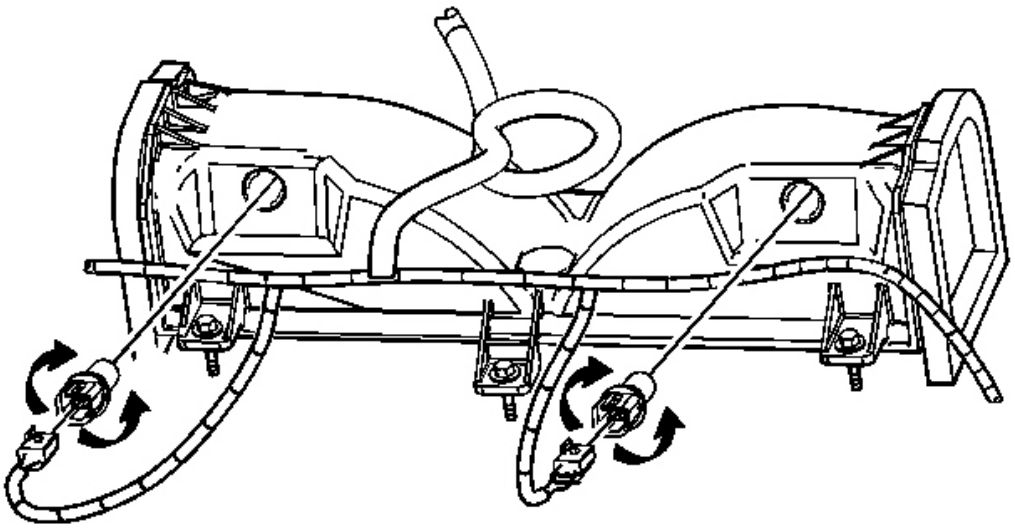

Fig. 267: Identifying Discharge Temperature Management Sensor Electrical Connectors
Courtesy of GENERAL MOTORS CORP.

5. Disconnect the discharge temperature management (DTM) sensor electrical connectors.

IMPORTANT: Rotate the DTM sensor counter-clockwise to disengage the sensor from the air duct.

6. Remove the DTM sensors.

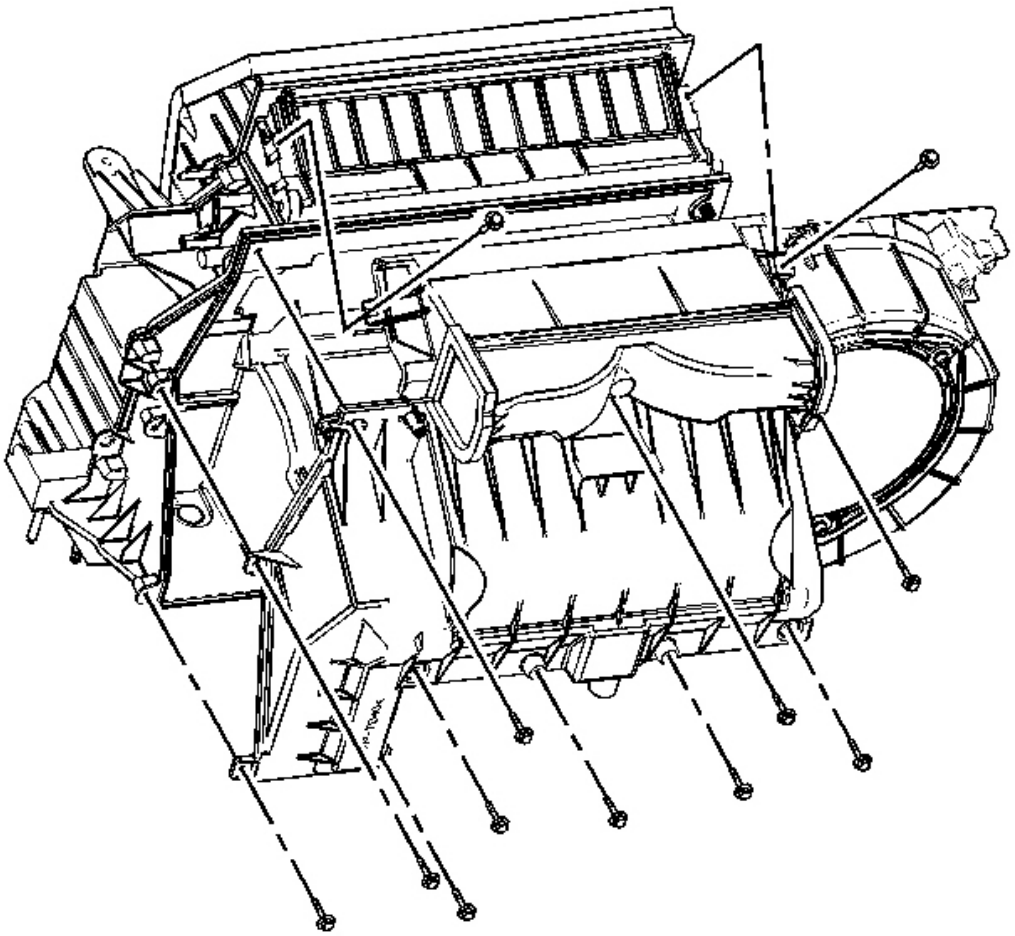

Fig. 268: Identifying Heater Cover Screws
Courtesy of GENERAL MOTORS CORP.

7. Remove the heater core cover screws.
8. Remove the heater core cover.

Installation Procedure

1. Install the heater core cover.

NOTE: Refer to Fastener Notice in Cautions and Notices.

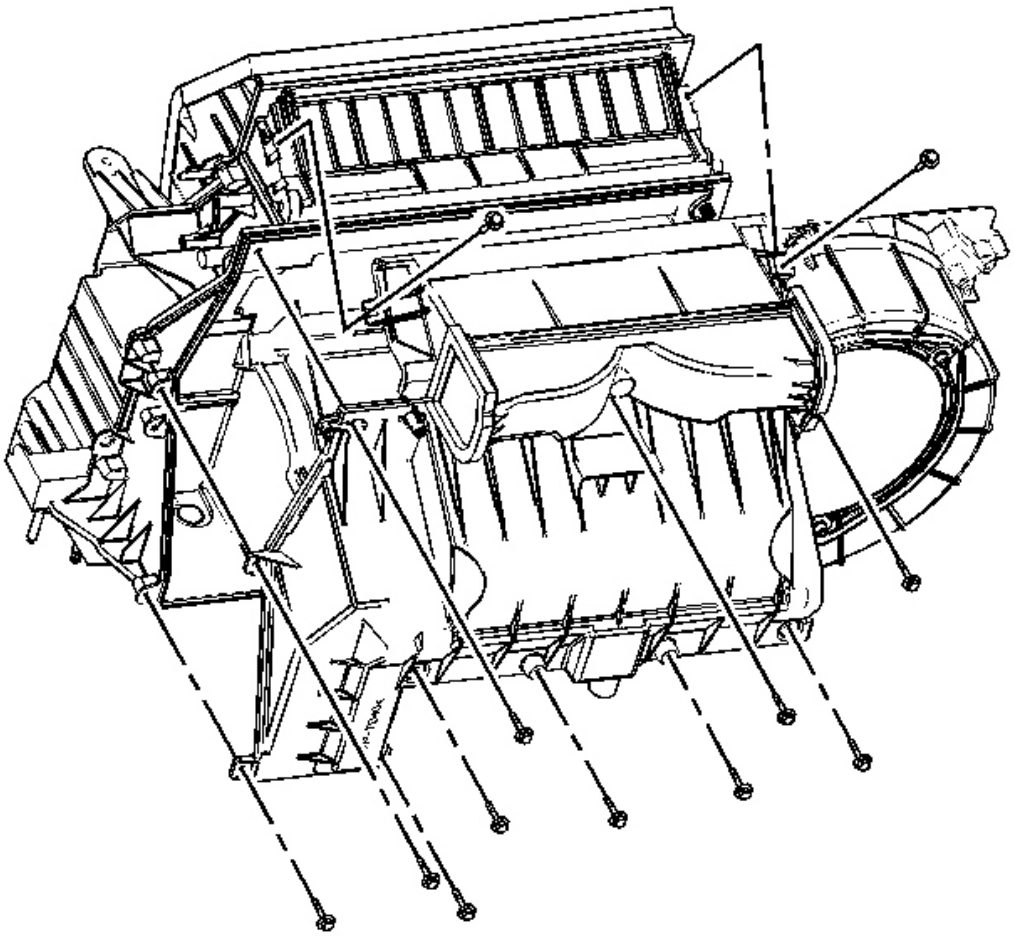

Fig. 269: Identifying Heater Cover Screws
Courtesy of GENERAL MOTORS CORP.

2. Install the heater core cover screws.

   Tighten: Tighten the screws to 1.6 N.m (14 lb in).

   IMPORTANT: Rotate the DTM sensor clockwise to engage the sensor to the air duct.

3. Install the DTM sensors.

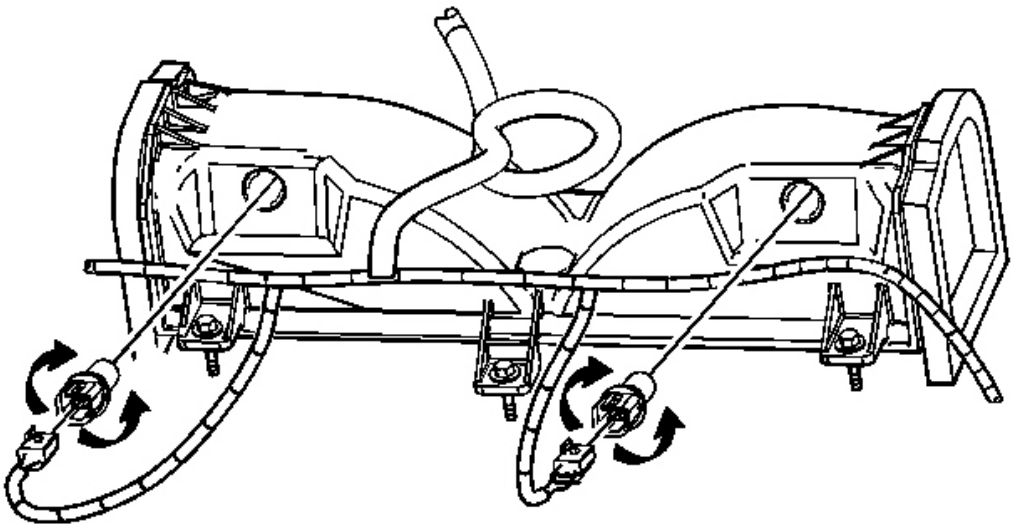

Fig. 270: Identifying Discharge Temperature Management Sensor Electrical Connectors
Courtesy of GENERAL MOTORS CORP.

4. Connect the discharge temperature management (DTM) sensor electrical connectors.
5. Connect the wiring harness to the heater core cover wire harness retainer (1).
6. Connect the wiring harness to the heater core cover wire harness retainer (3).

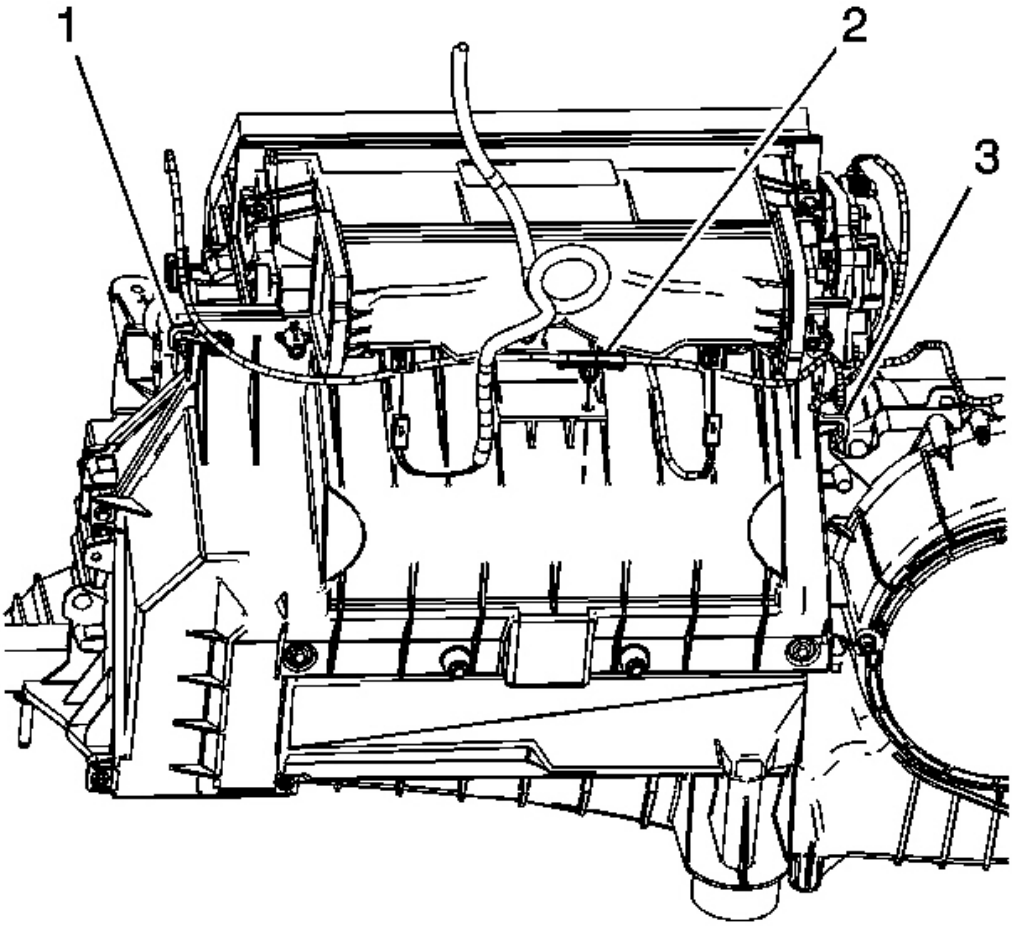

Fig. 271: Identifying Heater Core Cover Wire Harness Retainer & HVAC Module Wiring Harness Retainer Pin
Courtesy of GENERAL MOTORS CORP.

7. Connect the HVAC module wiring harness retainer pin (2) to the HVAC module.
8. Install the HVAC module. Refer to **HVAC Module Assembly Replacement**.

HEATER CORE REPLACEMENT

Removal Procedure

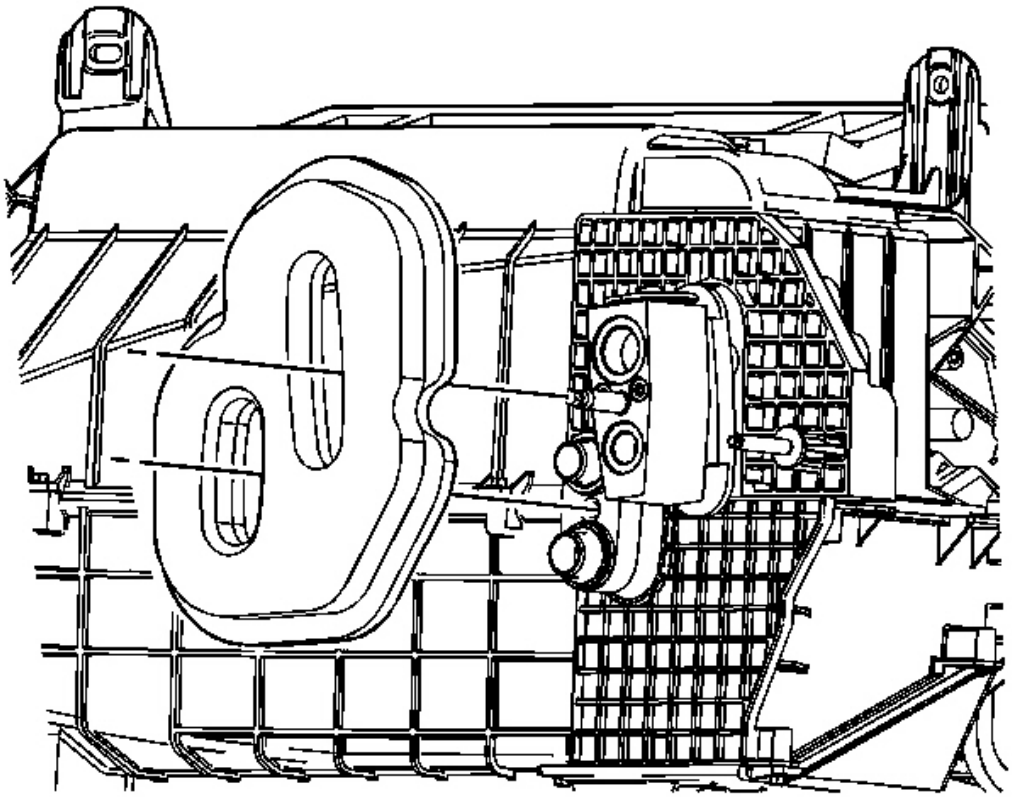

Fig. 272: Identifying HVAC Module Assembly Foam Seal
Courtesy of GENERAL MOTORS CORP.

1. Remove the HVAC module. Refer to **HVAC Module Assembly Replacement**.
2. Remove and discard the HVAC module assembly foam seal.

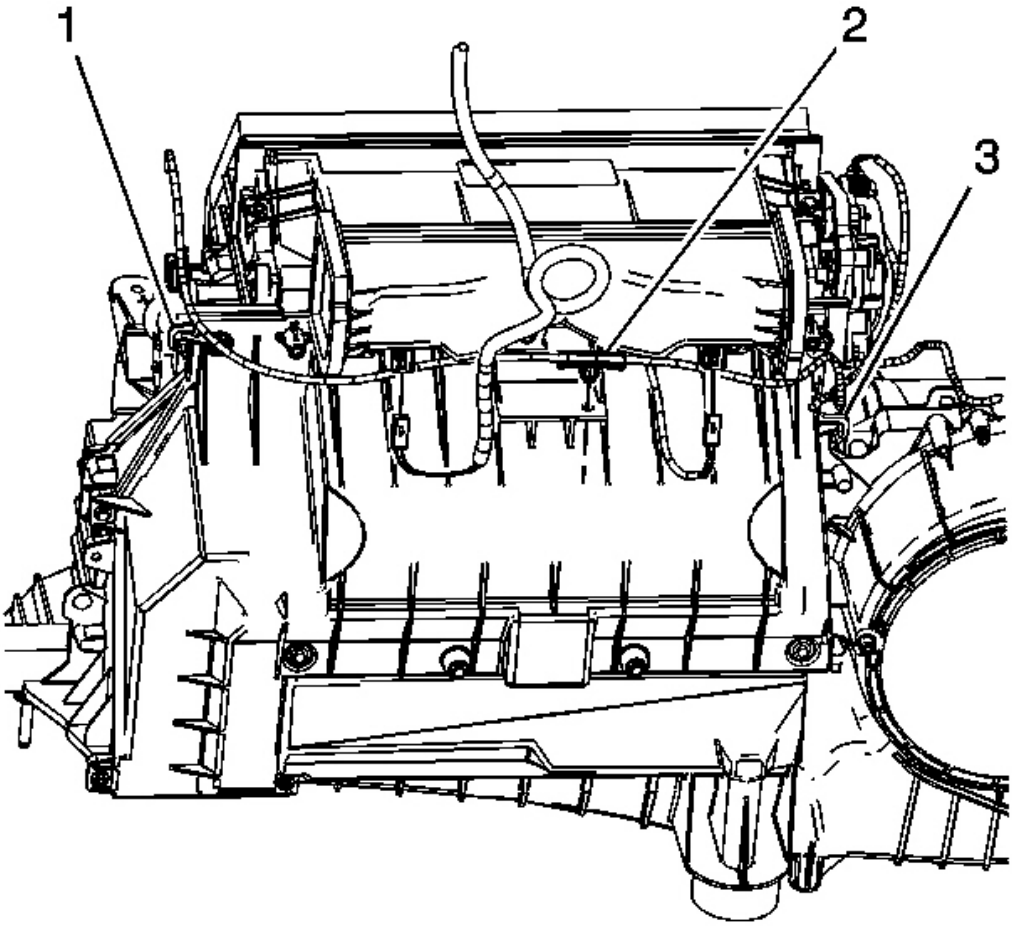

Fig. 273: Identifying Heater Core Cover Wire Harness Retainer & HVAC Module Wiring Harness Retainer Pin
Courtesy of GENERAL MOTORS CORP.

3. Disconnect the discharge temperature management (DTM) sensor electrical connectors.
4. Disconnect the HVAC module wiring harness retainer pin (2) from the HVAC module.
5. Disconnect the wiring harness from the heater core cover wire harness retainer (1) and reposition the wiring harness aside.
6. Disconnect the wiring harness from the heater core cover wire harness retainer (3) and reposition the wiring harness aside.

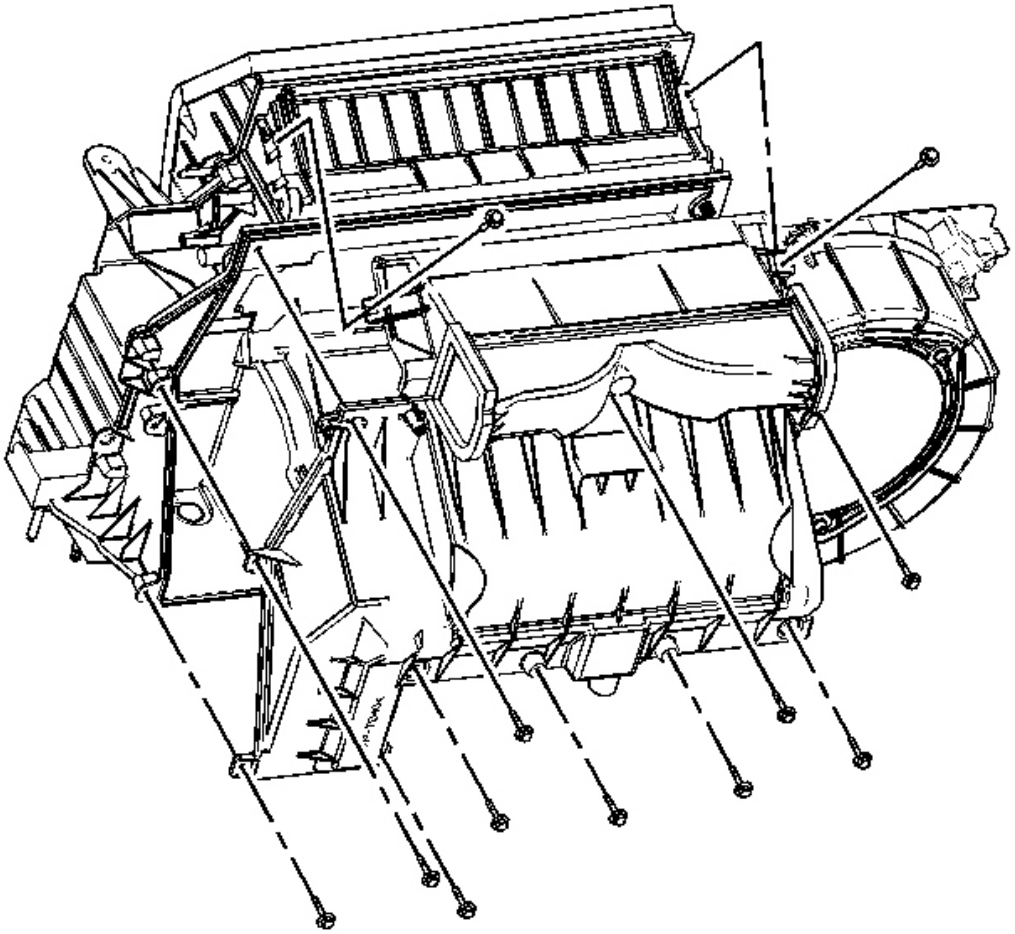

Fig. 274: Identifying Heater Cover Screws
Courtesy of GENERAL MOTORS CORP.

7. Remove the heater cover screws.
8. Remove the heater cover from the HVAC module.

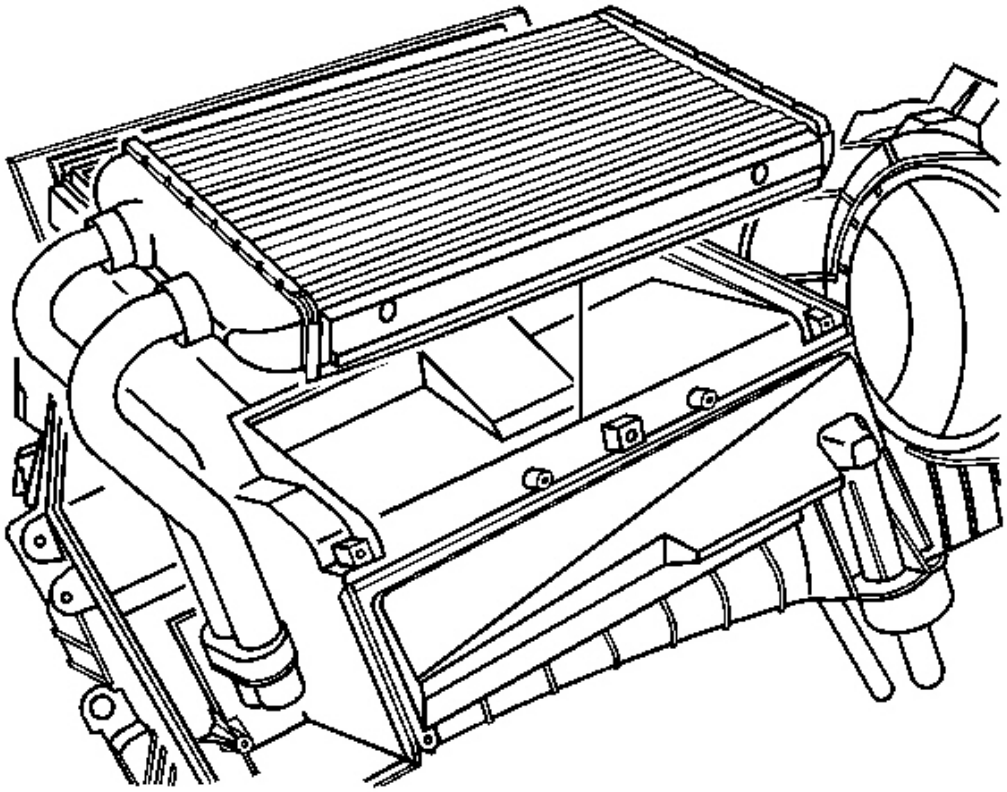

Fig. 275: Identifying Heater Core & HVAC Module
Courtesy of GENERAL MOTORS CORP.

9. Remove the heater core from the HVAC module.

Installation Procedure

IMPORTANT: Always install new heater core seals onto the heater core.

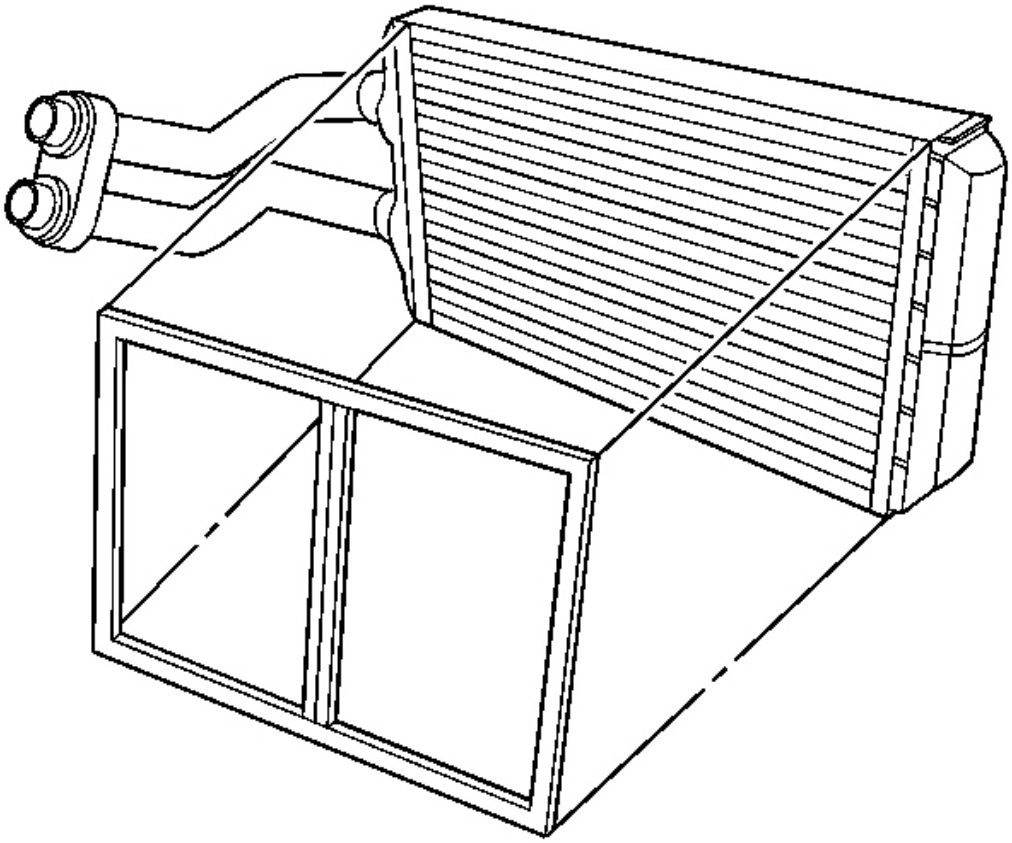

Fig. 276: Identifying Foam Sealer
Courtesy of GENERAL MOTORS CORP.

1. Install a new foam seal to the heater core.

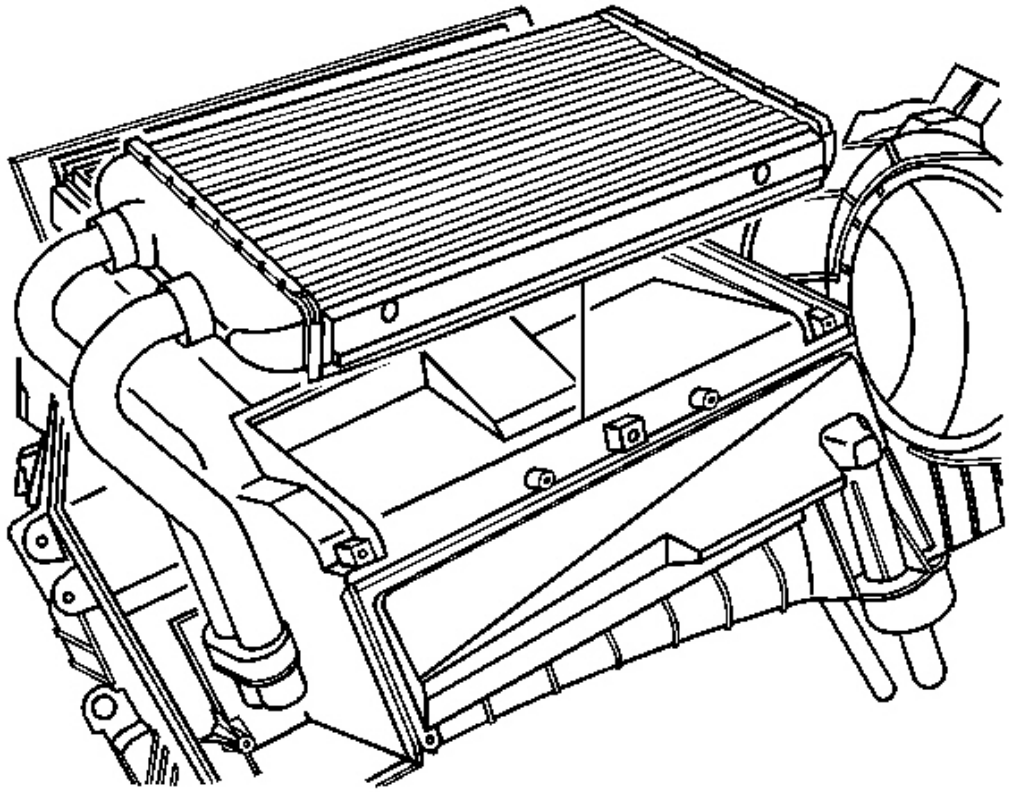

Fig. 277: Identifying Heater Core & HVAC Module
Courtesy of GENERAL MOTORS CORP.

2. Install the heater core to the HVAC module.

NOTE: Refer to Fastener Notice in Cautions and Notices.

3. Install the heater cover to the HVAC module.

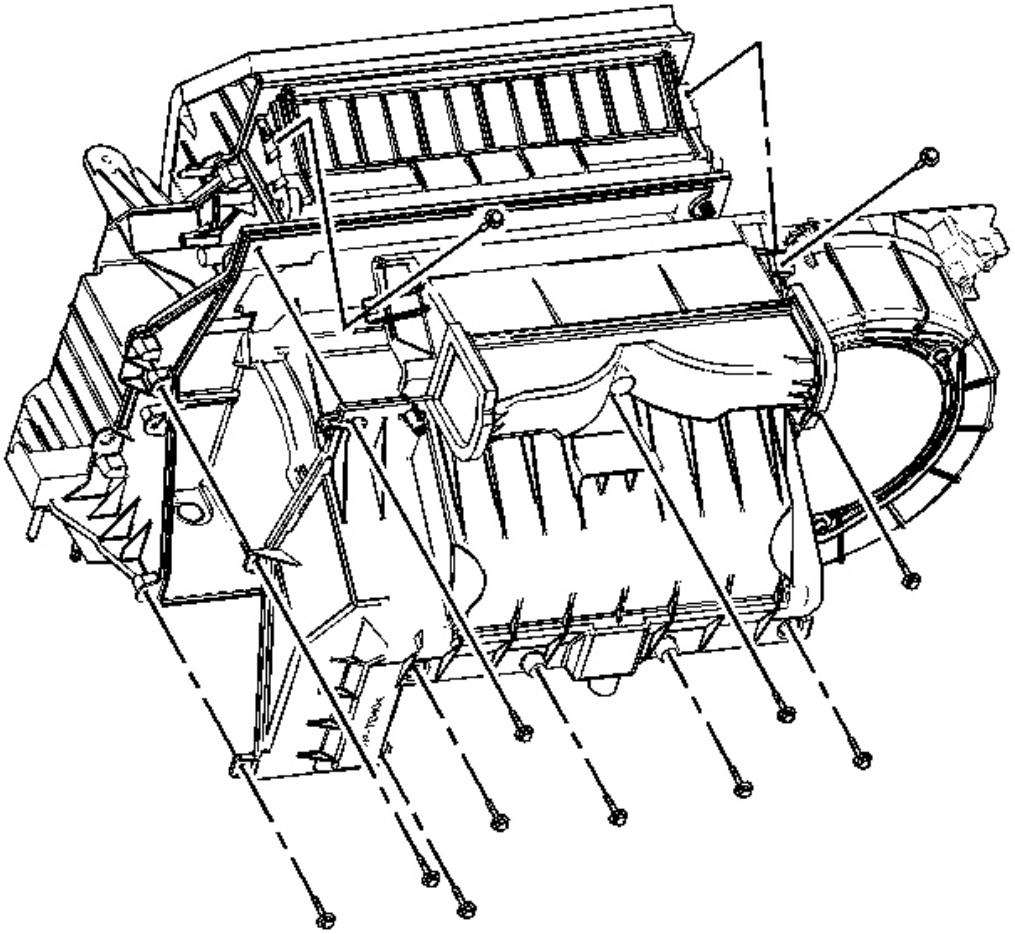

Fig. 278: Identifying Heater Cover Screws
Courtesy of GENERAL MOTORS CORP.

4. Install the heater cover screws.

   Tighten: Tighten the screws to 1.6 N.m (14 lb in).

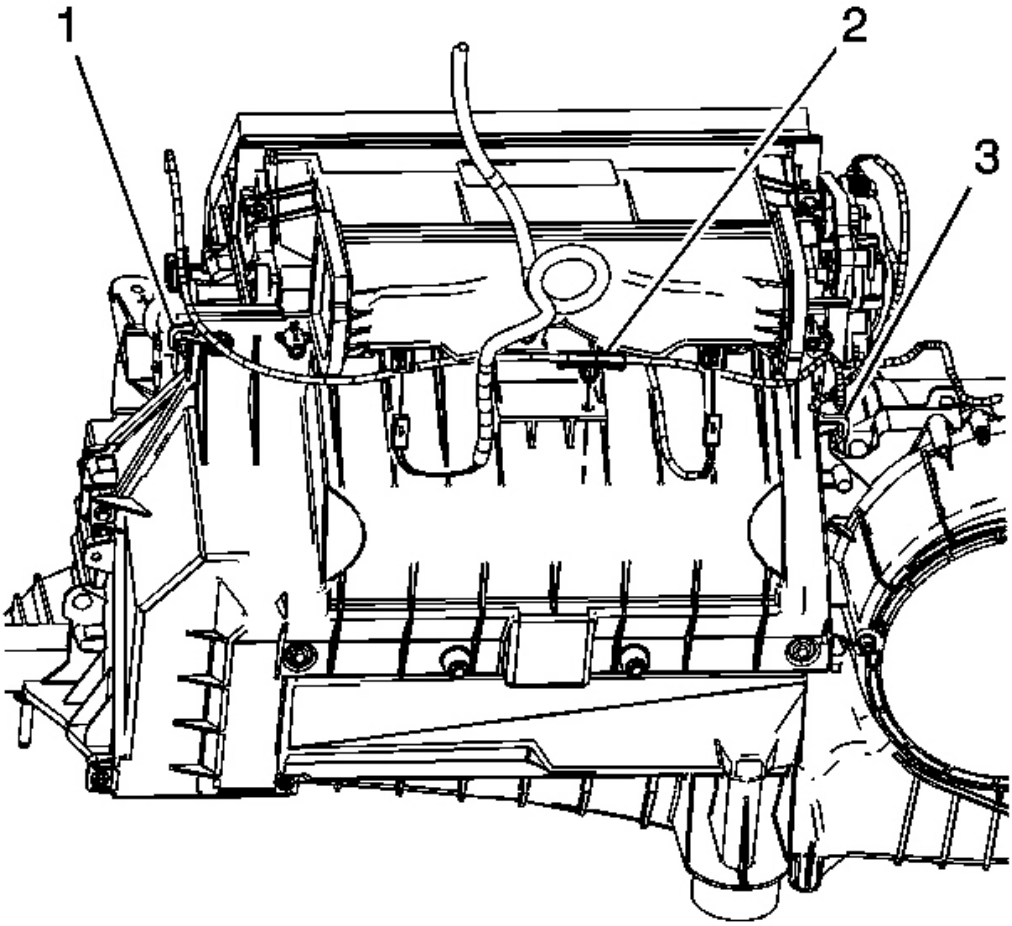

Fig. 279: Identifying Heater Core Cover Wire Harness Retainer & HVAC Module Wiring Harness Retainer Pin
Courtesy of GENERAL MOTORS CORP.

5. Reposition the HVAC wiring harness and connect the wiring harness to the heater core cover wiring harness retainer (1).
6. Reposition the HVAC wiring harness and connect the wiring harness to the heater core cover wiring harness retainer (3).
7. Connect the HVAC module wiring harness retainer pin (2) to the HVAC module.
8. Connect the discharge temperature management (DTM) sensor electrical connectors.
9. Install the HVAC module. Refer to **HVAC Module Assembly Replacement**.

SPECIAL TOOLS AND EQUIPMENT

SPECIAL TOOLS

Special Tools

Illustration	Tool Number/Description
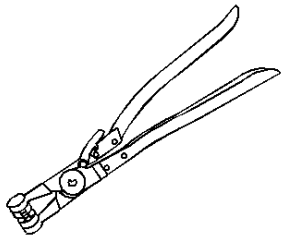	J 38185 Spring Hose Clamp Pliers
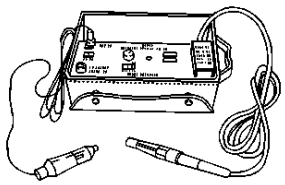	J 39400-A Halogen Leak Detector
	J 41447 R-134a Leak Detection Dye
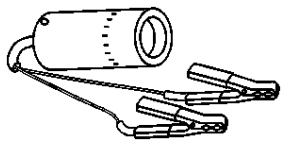	J 42220 Leak Detection Lamp
	J 43244 Relay Puller Pliers

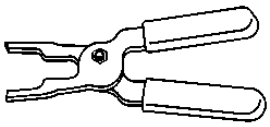	
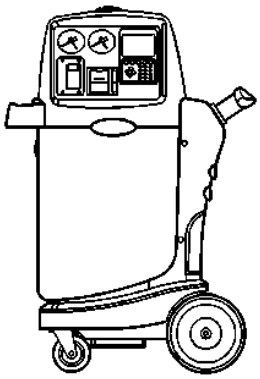	J 43600 ACR 2000 Air Conditioning Service Center
	J 43872 Fluorescent Dye Cleaner

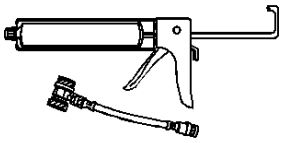	J 45037 A/C Oil Injector
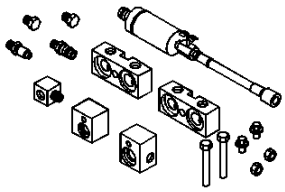	J 45268 A/C Flush Adapter Kit
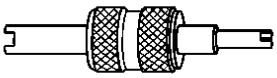	J 46246 Valve Core Tool
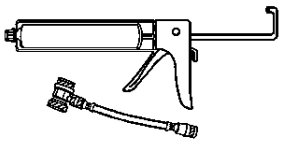	J 46297 A/C Dye Injector Kit
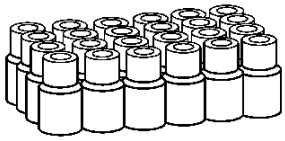	J 46297-12 Replacement Dye Cartridges