2004 - 2009 Cadillac XLR: 5L50-E Transmission Identification and VIN Derivative Location

Transmission ID and VIN Derivative Location (5L40-E/5L50-E)

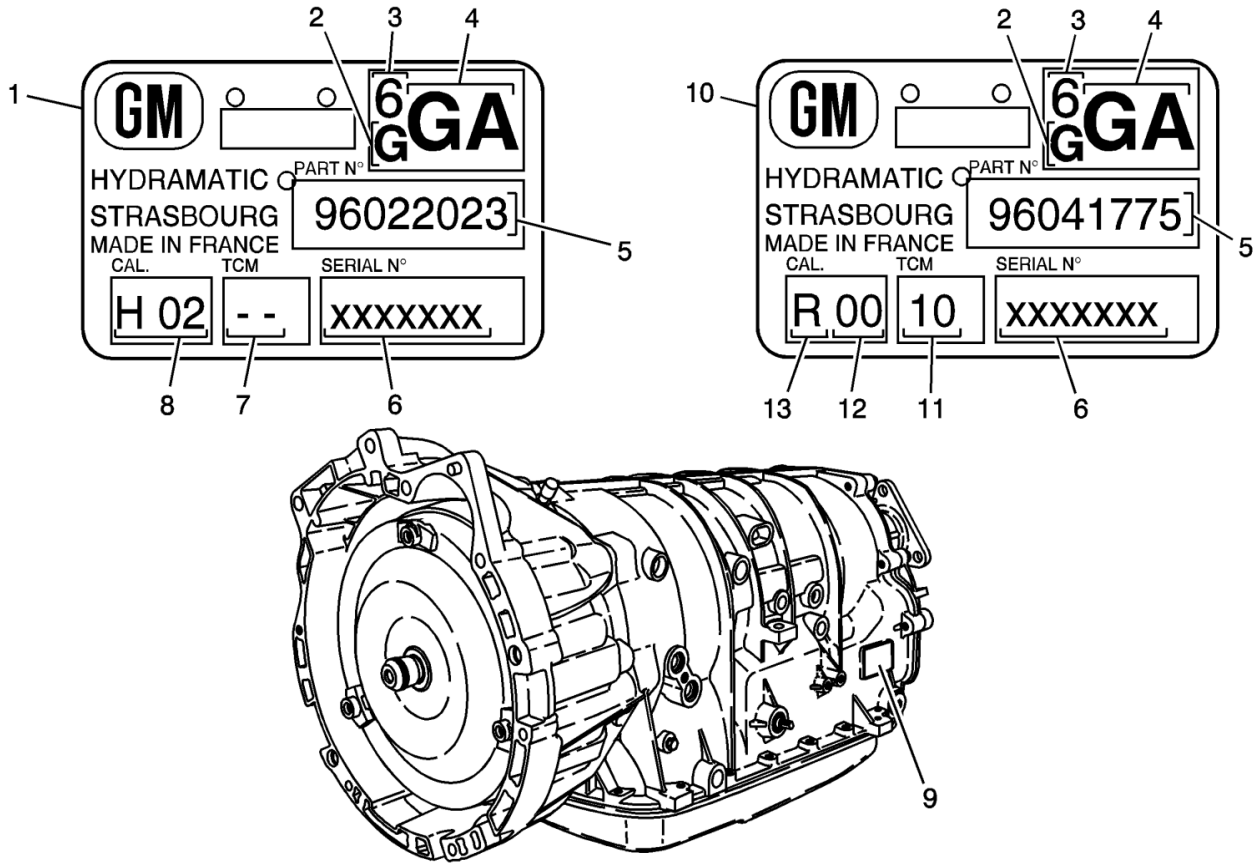

(1) Production or Service New

(2) Transmission Family– G for 5L40 and

	Z for 5L50
(2)	Transmission Family– G for 5L40 and Z for 5L50
(3)	Model Year 6 = 2006
(3)	Model Year 6 = 2006
(4)	Alpha Code
(4)	Alpha Code
(5)	Part Number
(5)	Part Number
(6)	Serial Number
(6)	Serial Number
(7)	Empty
(8)	Calibration Code
(9)	ID Tag Location
(10)	Remanufactured
(11)	Remanufactured Date– Week
(12)	Remanufactured Date– Year
(13)	R = Remanufactured

Online URL:
https://www.xlr-net.com/knowledgebase/article/2004-2009-cadillac-xlr-5l50-e-transmission-identification-and-vin-derivative-location-17.html