2006 - 2008 Cadillac XLR-V: Service Information: 6L80 or 6L90 Automatic Transmission Shift Conditions

Source: GM Techlink

Date: October 2011

Subject: 6L80 or 6L90 Automatic Transmission Shift Conditions

Models: 2006 - 2008 Cadillac XLR-V

Several shift conditions may be present on some 2006 - 2008 Cadillac STS-V, XLR-V, Corvette; 2007-2008 Escalade, Escalade ESV, Escalade EXT, XLR, Silverado, Sierra, Sierra Denali, Yukon Denali, Yukon XL Denali; 2008 Suburban, Yukon XL, H2 and G8 models equipped with the 6L80 or 6L90 automatic transmission (RPOs MYC, MYD).

A cracked 1-2-3-4/3-5-R clutch housing may cause any of the following conditions:

- Slip when Reverse is selected or no Reverse
- Delayed engagement into Reverse
- DTC P0776 set as an active or a history code in the Transmission Control Module, Malfunction Indicator Lamp (MIL) illuminated
- Harsh shifts from Second to Third

Inspect the 1-2-3-4 / 3-5-R clutch housing for a possible cracked weld by applying soap compound to the weld area of the housing. Hold your thumb over the air bleed passage and spray compressed air into the piston housing. Inspect the weld area for bubbles. If bubbles are detected, a new housing is

required. (Fig. 14)

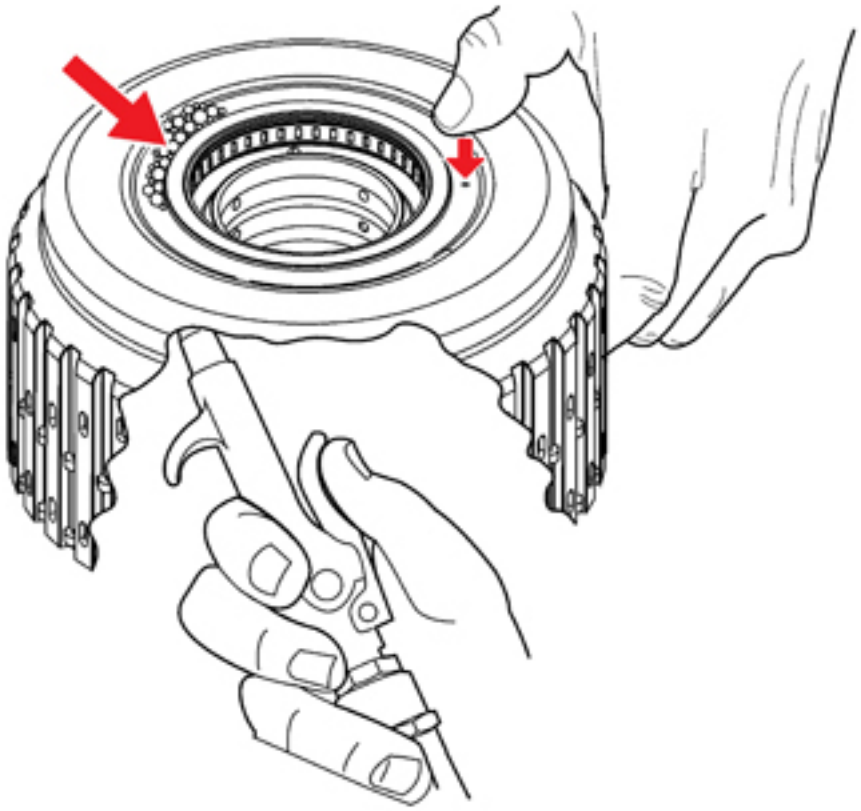

Fig. 14

TIP: If a new 1-2-3-4 / 3-5-R clutch housing is needed, be sure to install the 1-2-3-4/3-5-R bearing. (Fig. 15) If this bearing is not installed, harsh shifts will occur.

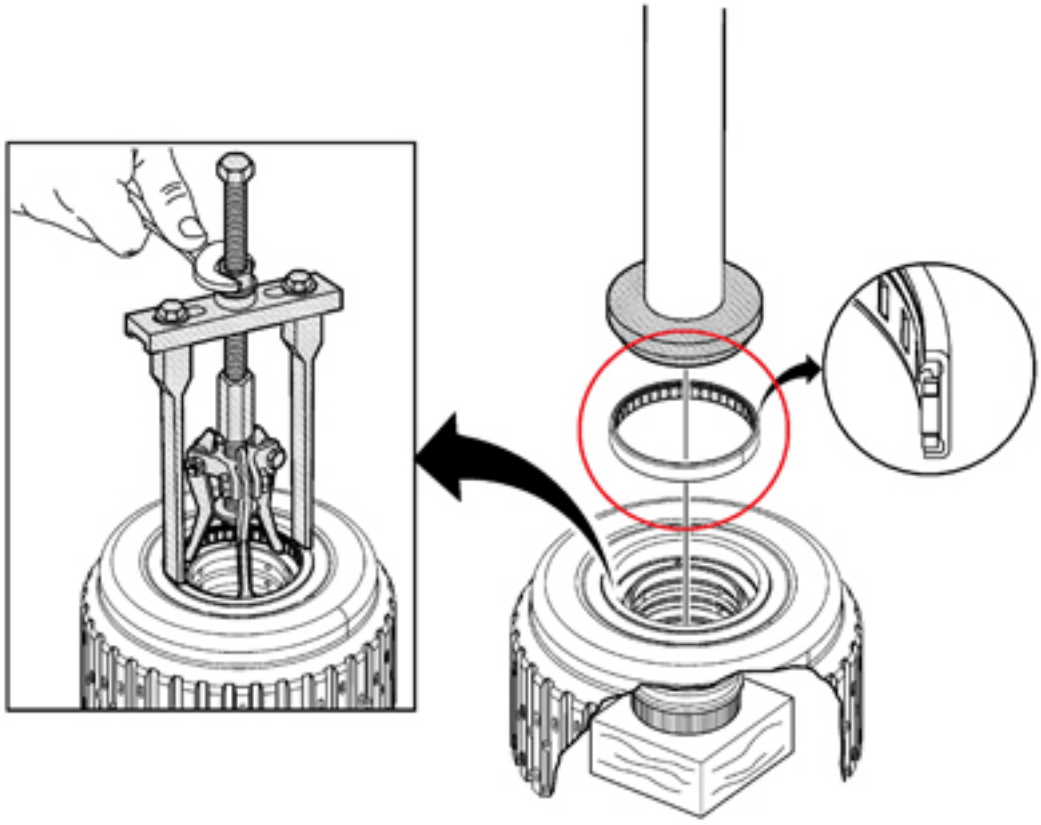

Fig. 15

- Thanks to Mike Johnston

Online URL:
https://www.xlr-net.com/knowledgebase/article/2006-2008-cadillac-xlr-v-service-information-6l80-or-6l90-automatic-transmission-shift-conditions-63.html